Appendix N: Final Construction Site Inspections

SPDES General Permit for Stormwater
Runoff from Construction Activity

SWPPP Inspection Report

Project Name: Reconstruct CVM Equine Facility
Permit No: NYR11J693
Inspection Date/Time: 11/11/24 9:30 AM
Inspector: Derek Franklin (CPESC:5397)
Inspection Type:: Final Stabilization
Amount of Rainfall(in): .272
Weather Condition: Sunny
Soil Condition: Wet
Report Signatory: Perno, Jake
Inspection Report Recipients: None Selected

Open Issues From Previous Inspection(s)

Report ID	General Site Conditions	Response	Map ID	Pic ID	Date Reported	Date Completed
~~32141~~	~~Are stabilization measures lacking in inactive areas?~~	~~YES~~			~~04-3-24 12:30 AM (224 days ago)~~	~~Uncorrected~~

Inspection Report

General Site Conditions	Response	Map ID	Pic ID	Contractor Completion Date
1. Is there evidence that site runoff is causing a substantial visible contrast to natural conditions at any discharge points from the site or points of discharge to natural surface waterbodies on, or immediately adjacent to, the site?	No			
2. Is construction impacting adjacent property or roadways?	No			
3. Is there evidence of any releases to the environment?	No			
4. Is dust control needed?	No			
5. Are more than 5 acres disturbed and not approved by DEC?	No			
6. Are stabilization measures lacking in inactive areas?	No			
7. Are post-construction stormwater management practices constructed/installed incorrectly? If yes specific deficiency listed below.	No			
8. SWPPP measure construction is out of sequence?	No			

Ledger	Response
1. Is a copy of the NOI and Acknoledgement Letter available on site and accessible for viewing?	Yes
2. Is a copy of the MS4 SWPPP acceptance Form available on site and accessible for viewing?	Yes
3. Is an up to date copy of the signed SWPPP retained at the construction site?	Yes
4. Is a copy of the SPDES General Permit retained at the construction site?	Yes
5. Does the SWPPP identify the contractor(s) and subcontractor(s) responsible for each measure?	Yes
6. Does the SWPPP identify at least one trained individual from each contractor(s) and subcontractor(s) companies?	Yes
7. Does the SWPPP include all the necessary Contractor Certification Statements and signatures?	Yes
8. Are copies of the previous inspections included in the ledger?	Yes
9. Are modification reports and stabilization records in the ledger and up to date?	Yes

E&SC Measures and Permanent Practices	Status	% Sediment	Map ID	PIC ID	Comments	Contractor Completion Date

Sediment Fences	Adequate					
Construction Entrances	Adequate					
Diversion Berm and Swales	Adequate					
Inlet protection	Adequate					
Soil stabilization	Adequate					
Detention Basin	Adequate					
Stone Check Dams	Adequate					
Excavation Dewatering	Adequate					
Concrete Washout	Adequate					

SWPPP Modification Required:	No
SWPPP Modification Comments:	
General Inspection Comments:	The town of ithaca has given final stabilization approval on the morning of 11/12/24
Other Report Recipients:	
View Map/Picture PDF:	View

Disturbed areas (incl. Planned work)

Inactive disturbed areas (>14 days)

Stabilized disturbed areas

Area of concern

Inspector Derek Franklin

Date 11-11-2024

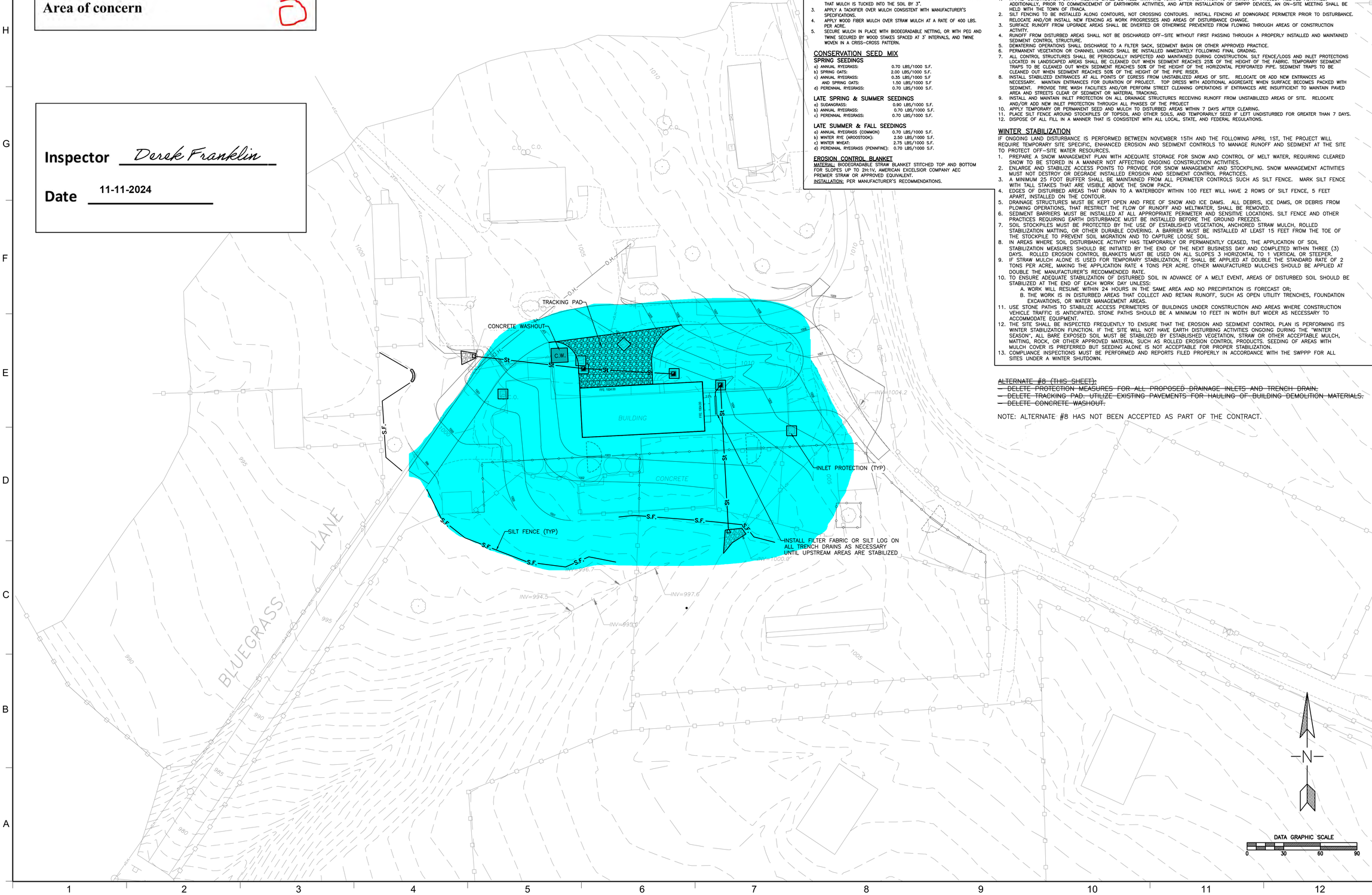

EROSION & SEDIMENT CONTROL NOTES – NOTES APPLY TO SHEETS C102 AND C103

STAGING, BORROW AND FILL SITES

IT SHALL BE THE RESPONSIBILITY OF THE CONTRACTOR TO APPLY ALL REQUIREMENTS OF THE SWPPP WHEN THE CONTRACTOR OR ANY OF THE SUBCONTRACTORS ELECT TO USE BORROW OR FILL SITES, OR CONSTRUCTION STAGING AND MATERIAL STORAGE SITES, EITHER CONTIGUOUS TO OR REMOTE FROM THE CONSTRUCTION SITE. WHEN SUCH OFF-SITE AREAS ARE USED FOR THIS PROJECT, THEY ARE CONSIDERED TO BE PART OF THE CONSTRUCTION SITE COVERED BY THE SWPPP. ALL REQUIREMENTS OF THE SWPPP SHALL APPLY TO SUCH OFF-SITE AREAS, UNLESS COVERED UNDER A DIFFERENT NYSDEC SPDES PERMIT.

MULCH

MATERIAL: CLEAN STRAW MULCH
APPLICATION RATE: 100 LBS (2-3 BALES)/1000 S.F.

MULCH SHALL BE APPLIED OVER TEMPORARY OR PERMANENT SEEDING AND SHALL BE ANCHORED USING ONE OF THE FOLLOWING OPTIONS:

1. ON SLOPES <3%, DRIVE TRACKED EQUIPMENT OVER MULCH, WITH TREADS RUNNING PARALLEL TO THE CONTOUR.
2. USE A MULCH ANCHORING TOOL OR SQUARE SHOVEL TO CUT MULCH IN SO THAT MULCH IS TUCKED INTO THE SOIL BY 3".
3. APPLY A TACKIFIER OVER MULCH CONSISTENT WITH MANUFACTURER'S SPECIFICATIONS.
4. APPLY WOOD FIBER MULCH OVER STRAW MULCH AT A RATE OF 400 LBS. PER ACRE.
5. SECURE MULCH IN PLACE WITH BIODEGRADABLE NETTING, OR WITH PEG AND TWINE SECURED BY WOOD STAKES SPACED AT 3' INTERVALS, AND TWINE WOVEN IN A CRISS-CROSS PATTERN.

CONSERVATION SEED MIX

SPRING SEEDINGS

a) ANNUAL RYEGRASS:	0.70 LBS/1000 S.F.
b) SPRING OATS:	2.00 LBS/1000 S.F.
c) ANNUAL RYEGRASS: AND SPRING OATS:	0.35 LBS/1000 S.F 1.50 LBS/1000 S.F
e) PERENNIAL RYEGRASS:	0.70 LBS/1000 S.F.

LATE SPRING & SUMMER SEEDINGS

a) SUDANGRASS:	0.90 LBS/1000 S.F.
b) ANNUAL RYEGRASS:	0.70 LBS/1000 S.F.
c) PERENNIAL RYEGRASS:	0.70 LBS/1000 S.F.

LATE SUMMER & FALL SEEDINGS

a) ANNUAL RYEGRASS (COMMON)	0.70 LBS/1000 S.F.
b) WINTER RYE (AROOSTOOK):	2.50 LBS/1000 S.F.
c) WINTER WHEAT:	2.75 LBS/1000 S.F.
d) PERENNIAL RYEGRASS (PENNFINE):	0.70 LBS/1000 S.F.

EROSION CONTROL BLANKET

MATERIAL: BIODEGRADABLE STRAW BLANKET STITCHED TOP AND BOTTOM FOR SLOPES UP TO 2H:1V. AMERICAN EXCELSIOR COMPANY AEC PREMIER STRAW OR APPROVED EQUIVALENT.
INSTALLATION: PER MANUFACTURER'S RECOMMENDATIONS.

SEQUENCING

GENERAL: DO NOT DISTURB PAVED AREAS OF SITE UNTIL NECESSARY TO DO SO. UTILIZE EXISTING PAVED DRIVES WHEN POSSIBLE DURING DEMOLITION PHASE OF WORK. USE EXISTING PAVED DRIVES FOR HAUL ROUTES.

1. INSTALL SILT FENCING AT LOWER PERIMETER OF AREAS TO BE DISTURBED OR PAVED AREAS TO BE DEMOLISHED IN LOCATIONS SHOWN.
2. INSTALL TRUCK TRACKING PADS AT ALL POINTS OF EGRESS FROM UNSTABILIZED AREAS OF SITE EXITING ONTO PAVED SURFACES.
3. INSTALL INLET PROTECTION ON EXISTING INLETS. IF INLET IS TO BE REMOVED, MAINTAIN INLET PROTECTION UNTIL STRUCTURE IS REMOVED. TEMPORARILY CAP ANY PIPING LEFT IN PLACE.
4. INSTALL ROCK CHECK DAMS AS SHOWN ON PLANS.
5. INSTALL PROPOSED STORM SEWER IMPROVEMENTS AND INSTALL RIPRAP OUTLET PROTECTION AS SHOWN ON DRAWINGS. ROUGH GRADE AND OVER-EXCAVATE FILTER BASINS TO PROVIDE REQUIRED SEDIMENT TRAP VOLUME. INSTALL TEMPORARY SEDIMENT TRAP OUTLET RISER.
6. INSTALL INLET PROTECTION ON NEW STORM STRUCTURES ONCE INSTALLED.
7. BEGIN SITE EARTHWORK OPERATIONS. RUNOFF FROM ANY EXPOSED SOILS TO BE DIRECTED TO SILT FENCE, ROCK CHECK DAMS, OR SEDIMENT TRAP.
8. RELOCATE AND/OR INSTALL NEW SILT FENCING AS SITE EARTHWORK PROGRESSES.
9. COMPLETE GRADING AND PAVEMENTS.
10. INSTALL LANDSCAPING, TOPSOIL, SEED AND MULCH.
11. REMOVE SILT AND DEBRIS FROM ALL STORM SEWERS.
12. STABILIZE ALL DISTURBED AREAS OF SITE WITH VEGETATION AND/OR PERMANENT LANDSCAPING WITH MINIMUM 80% COVERAGE.
13. REMOVE SILT FROM TEMPORARY PRACTICES. REMOVE ALL TEMPORARY PRACTICES AND COMPLETE FINAL LANDSCAPING.
14. REMOVE TEMPORARY SEDIMENT TRAP OUTLET RISER. INSTALL PERMANENT OUTLET CONTROL STRUCTURES, DRY BASIN UNDERDRAIN, BIORETENTION FILTER AND UNDERDRAIN, FOREBAY, WEIR AND OUTLET PROTECTION. ESTABLISH VEGETATION AT BASIN.

GENERAL NOTES

1. A PRE-CONSTRUCTION SWPPP MEETING SHALL BE HELD WITH THE TOWN OF ITHACA PRIOR TO INITIATION OF PROJECT-RELATED ACTIVITIES. ADDITIONALLY, PRIOR TO COMMENCEMENT OF EARTHWORK ACTIVITIES, AND AFTER INSTALLATION OF SWPPP DEVICES, AN ON-SITE MEETING SHALL BE HELD WITH THE TOWN OF ITHACA.
2. SILT FENCING TO BE INSTALLED ALONG CONTOURS, NOT CROSSING CONTOURS. INSTALL FENCING AT DOWNGRADE PERIMETER PRIOR TO DISTURBANCE. RELOCATE AND/OR INSTALL NEW FENCING AS WORK PROGRESSES AND AREAS OF DISTURBANCE CHANGE.
3. SURFACE RUNOFF FROM UPGRADE AREAS SHALL BE DIVERTED OR OTHERWISE PREVENTED FROM FLOWING THROUGH AREAS OF CONSTRUCTION ACTIVITY.
4. RUNOFF FROM DISTURBED AREAS SHALL NOT BE DISCHARGED OFF-SITE WITHOUT FIRST PASSING THROUGH A PROPERLY INSTALLED AND MAINTAINED SEDIMENT CONTROL STRUCTURE.
5. DEWATERING OPERATIONS SHALL DISCHARGE TO A FILTER SACK, SEDIMENT BASIN OR OTHER APPROVED PRACTICE.
6. PERMANENT VEGETATION OR CHANNEL LININGS SHALL BE INSTALLED IMMEDIATELY FOLLOWING FINAL GRADING.
7. ALL CONTROL STRUCTURES SHALL BE PERIODICALLY INSPECTED AND MAINTAINED DURING CONSTRUCTION. SILT FENCE/LOGS AND INLET PROTECTIONS LOCATED IN LANDSCAPED AREAS SHALL BE CLEANED OUT WHEN SEDIMENT REACHES 25% OF THE HEIGHT OF THE FABRIC. TEMPORARY SEDIMENT TRAPS TO BE CLEANED OUT WHEN SEDIMENT REACHES 50% OF THE HEIGHT OF THE HORIZONTAL PERFORATED PIPE. SEDIMENT TRAPS TO BE CLEANED OUT WHEN SEDIMENT REACHES 50% OF THE HEIGHT OF THE PIPE RISER.
8. INSTALL STABILIZED ENTRANCES AT ALL POINTS OF EGRESS FROM UNSTABILIZED AREAS OF SITE. RELOCATE OR ADD NEW ENTRANCES AS NECESSARY. MAINTAIN ENTRANCES FOR DURATION OF PROJECT. TOP DRESS WITH ADDITIONAL AGGREGATE WHEN SURFACE BECOMES PACKED WITH SEDIMENT. PROVIDE TIRE WASH FACILITIES AND/OR PERFORM STREET CLEANING OPERATIONS IF ENTRANCES ARE INSUFFICIENT TO MAINTAIN PAVED AREA AND STREETS CLEAR OF SEDIMENT OR MATERIAL TRACKING.
9. INSTALL AND MAINTAIN INLET PROTECTION ON ALL DRAINAGE STRUCTURES RECEIVING RUNOFF FROM UNSTABILIZED AREAS OF SITE. RELOCATE AND/OR ADD NEW INLET PROTECTION THROUGH ALL PHASES OF THE PROJECT
10. APPLY TEMPORARY OR PERMANENT SEED AND MULCH TO DISTURBED AREAS WITHIN 7 DAYS AFTER CLEARING.
11. PLACE SILT FENCE AROUND STOCKPILES OF TOPSOIL AND OTHER SOILS, AND TEMPORARILY SEED IF LEFT UNDISTURBED FOR GREATER THAN 7 DAYS.
12. DISPOSE OF ALL FILL IN A MANNER THAT IS CONSISTENT WITH ALL LOCAL, STATE, AND FEDERAL REGULATIONS.

WINTER STABILIZATION

IF ONGOING LAND DISTURBANCE IS PERFORMED BETWEEN NOVEMBER 15TH AND THE FOLLOWING APRIL 1ST, THE PROJECT WILL REQUIRE TEMPORARY SITE SPECIFIC, ENHANCED EROSION AND SEDIMENT CONTROLS TO MANAGE RUNOFF AND SEDIMENT AT THE SITE TO PROTECT OFF-SITE WATER RESOURCES.

1. PREPARE A SNOW MANAGEMENT PLAN WITH ADEQUATE STORAGE FOR SNOW AND CONTROL OF MELT WATER, REQUIRING CLEARED SNOW TO BE STORED IN A MANNER NOT AFFECTING ONGOING CONSTRUCTION ACTIVITIES.
2. ENLARGE AND STABILIZE ACCESS POINTS TO PROVIDE FOR SNOW MANAGEMENT AND STOCKPILING. SNOW MANAGEMENT ACTIVITIES MUST NOT DESTROY OR DEGRADE INSTALLED EROSION AND SEDIMENT CONTROL PRACTICES.
3. A MINIMUM 25 FOOT BUFFER SHALL BE MAINTAINED FROM ALL PERIMETER CONTROLS SUCH AS SILT FENCE. MARK SILT FENCE WITH TALL STAKES THAT ARE VISIBLE ABOVE THE SNOW PACK.
4. EDGES OF DISTURBED AREAS THAT DRAIN TO A WATERBODY WITHIN 100 FEET WILL HAVE 2 ROWS OF SILT FENCE, 5 FEET APART, INSTALLED ON THE CONTOUR.
5. DRAINAGE STRUCTURES MUST BE KEPT OPEN AND FREE OF SNOW AND ICE DAMS. ALL DEBRIS, ICE DAMS, OR DEBRIS FROM PLOWING OPERATIONS, THAT RESTRICT THE FLOW OF RUNOFF AND MELTWATER, SHALL BE REMOVED.
6. SEDIMENT BARRIERS MUST BE INSTALLED AT ALL APPROPRIATE PERIMETER AND SENSITIVE LOCATIONS. SILT FENCE AND OTHER PRACTICES REQUIRING EARTH DISTURBANCE MUST BE INSTALLED BEFORE THE GROUND FREEZES.
7. SOIL STOCKPILES MUST BE PROTECTED BY THE USE OF ESTABLISHED VEGETATION, ANCHORED STRAW MULCH, ROLLED STABILIZATION MATTING, OR OTHER DURABLE COVERING. A BARRIER MUST BE INSTALLED AT LEAST 15 FEET FROM THE TOE OF THE STOCKPILE TO PREVENT SOIL MIGRATION AND TO CAPTURE LOOSE SOIL.
8. IN AREAS WHERE SOIL DISTURBANCE ACTIVITY HAS TEMPORARILY OR PERMANENTLY CEASED, THE APPLICATION OF SOIL STABILIZATION MEASURES SHOULD BE INITIATED BY THE END OF THE NEXT BUSINESS DAY AND COMPLETED WITHIN THREE (3) DAYS. ROLLED EROSION CONTROL BLANKETS MUST BE USED ON ALL SLOPES 3 HORIZONTAL TO 1 VERTICAL OR STEEPER.
9. IF STRAW MULCH ALONE IS USED FOR TEMPORARY STABILIZATION, IT SHALL BE APPLIED AT DOUBLE THE STANDARD RATE OF 2 TONS PER ACRE, MAKING THE APPLICATION RATE 4 TONS PER ACRE. OTHER MANUFACTURED MULCHES SHOULD BE APPLIED AT DOUBLE THE MANUFACTURER'S RECOMMENDED RATE.
10. TO ENSURE ADEQUATE STABILIZATION OF DISTURBED SOIL IN ADVANCE OF A MELT EVENT, AREAS OF DISTURBED SOIL SHOULD BE STABILIZED AT THE END OF EACH WORK DAY UNLESS:
    A. WORK WILL RESUME WITHIN 24 HOURS IN THE SAME AREA AND NO PRECIPITATION IS FORECAST OR;
    B. THE WORK IS IN DISTURBED AREAS THAT COLLECT AND RETAIN RUNOFF, SUCH AS OPEN UTILITY TRENCHES, FOUNDATION EXCAVATIONS, OR WATER MANAGEMENT AREAS.
11. USE STONE PATHS TO STABILIZE ACCESS PERIMETERS OF BUILDINGS UNDER CONSTRUCTION AND AREAS WHERE CONSTRUCTION VEHICLE TRAFFIC IS ANTICIPATED. STONE PATHS SHOULD BE A MINIMUM 10 FEET IN WIDTH BUT WIDER AS NECESSARY TO ACCOMMODATE EQUIPMENT.
12. THE SITE SHALL BE INSPECTED FREQUENTLY TO ENSURE THAT THE EROSION AND SEDIMENT CONTROL PLAN IS PERFORMING ITS WINTER STABILIZATION FUNCTION. IF THE SITE WILL NOT HAVE EARTH DISTURBING ACTIVITIES ONGOING DURING THE "WINTER SEASON", ALL BARE EXPOSED SOIL MUST BE STABILIZED BY ESTABLISHED VEGETATION, STRAW OR OTHER ACCEPTABLE MULCH, MATTING, ROCK, OR OTHER APPROVED MATERIAL SUCH AS ROLLED EROSION CONTROL PRODUCTS. SEEDING OF AREAS WITH MULCH COVER IS PREFERRED BUT SEEDING ALONE IS NOT ACCEPTABLE FOR PROPER STABILIZATION.
13. COMPLIANCE INSPECTIONS MUST BE PERFORMED AND REPORTS FILED PROPERLY IN ACCORDANCE WITH THE SWPPP FOR ALL SITES UNDER A WINTER SHUTDOWN.

~~ALTERNATE #8 (THIS SHEET):~~
~~- DELETE PROTECTION MEASURES FOR ALL PROPOSED DRAINAGE INLETS AND TRENCH DRAIN.~~
~~- DELETE TRACKING PAD. UTILIZE EXISTING PAVEMENTS FOR HAULING OF BUILDING DEMOLITION MATERIALS.~~
~~- DELETE CONCRETE WASHOUT.~~

NOTE: ALTERNATE #8 HAS NOT BEEN ACCEPTED AS PART OF THE CONTRACT.

Chiang | O'Brien
ARCHITECTS

T.G. MILLER, P.C.
ENGINEERS AND SURVEYORS
605 WEST STATE STREET, SUITE A
ITHACA, NEW YORK 14850
WWW.TGMILLERPC.COM
607-272-6477

STATE OF NEW YORK · FRANK L. SANTORO · 068931 · LICENSED PROFESSIONAL ENGINEER

WARNING: ALTERATIONS TO THIS MAP NOT CONFORMING TO SECTION 7209, SUBDIVISION 2, NEW YORK STATE EDUCATION LAW, ARE PROHIBITED BY LAW. ALL CERTIFICATIONS HEREON ARE VALID FOR THIS MAP AND COPIES THEREOF ONLY IF SAID MAP OR COPIES BEAR THE SEAL OF THE LICENSED PROFESSIONAL ENGINEER WHOSE SIGNATURE APPEARS HEREON.

REVISION #	REVISION DATE

CONSTRUCTION DOCUMENTS
RECONSTRUCT CVM EQUINE FACILITY
CORNELL UNIVERSITY EQUINE PARK - 1 BLUEGRASS LN, ITHACA, NY 14850

DATE	AUGUST 5, 2022
SUCF #	191017
TGM #	E19-43
DRAWN BY	SAS, FLS
SCALE	AS SHOWN

COMMODITIES BARN - EROSION AND SEDIMENT CONTROL PLAN

C102

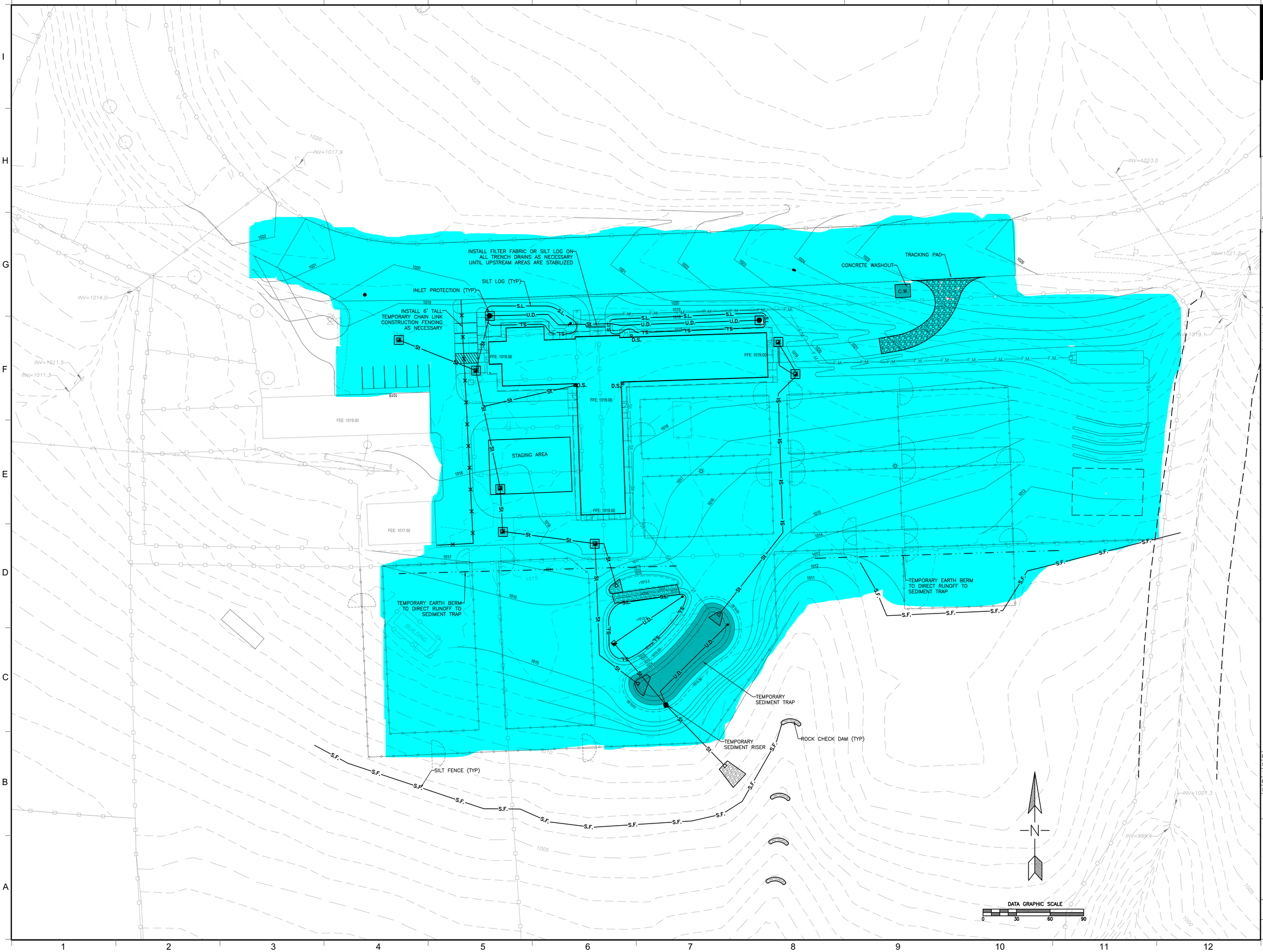

Chiang | O'Brien
ARCHITECTS

T.G. MILLER, P.C.
ENGINEERS AND SURVEYORS
605 WEST STATE STREET, SUITE A
ITHACA, NEW YORK 14850
WWW.TGMILLERPC.COM
607-272-6477

STATE OF NEW YORK · FRANK L. SANTORO · 068931 · LICENSED PROFESSIONAL ENGINEER

WARNING: ALTERATIONS TO THIS MAP NOT CONFORMING TO SECTION 7209, SUBDIVISION 2, NEW YORK STATE EDUCATION LAW, ARE PROHIBITED BY LAW. ALL CERTIFICATIONS HEREON ARE VALID FOR THIS MAP AND COPIES THEREOF ONLY IF SAID MAP OR COPIES BEAR THE SEAL OF THE LICENSED PROFESSIONAL ENGINEER WHOSE SIGNATURE APPEARS HEREON.

REVISION #	REVISION DATE

CONSTRUCTION DOCUMENTS

RECONSTRUCT CVM EQUINE FACILITY

CORNELL UNIVERSITY EQUINE PARK - 1 BLUEGRASS LN, ITHACA, NY 14850

DATE	AUGUST 5, 2022
SUCF #	191017
TGM #	E19-43
DRAWN BY	SAS, FLS
SCALE	AS SHOWN

MAIN BARN - EROSION AND SEDIMENT CONTROL PLAN

C103

EMPIRE
215-364-5260

FDC

SPDES General Permit for Stormwater
Runoff from Construction Activity

SWPPP Inspection Report

Project Name: Experimental Hall for CHESS
Permit No: NYR11J322
Inspection Date/Time: 7/17/24 9:00 AM
Inspector: Derek Franklin (CPESC:5397)
Inspection Type:: Final Stabilization
Amount of Rainfall(in): .725
Weather Condition: Sunny
Soil Condition: Wet
Report Signatory: Jones, Scott
Inspection Report Recipients: Bugis, Kara |

Inspection Report

General Site Conditions	Response	Map ID	Pic ID	Contractor Completion Date
1. Is there evidence that site runoff is causing a substantial visible contrast to natural conditions at any discharge points from the site or points of discharge to natural surface waterbodies on, or immediately adjacent to, the site?	No			
2. Is construction impacting adjacent property or roadways?	No			
3. Is there evidence of any releases to the environment?	No			
4. Is dust control needed?	No			
5. Are more than 5 acres disturbed and not approved by DEC?	No			
6. Are stabilization measures lacking in inactive areas?	No			
7. Are post-construction stormwater management practices constructed/installed incorrectly? If yes specific deficiency listed below.	No			
8. SWPPP measure construction is out of sequence?	No			

Ledger	Response
1. Is a copy of the NOI and Acknoledgement Letter available on site and accessible for viewing?	Yes
2. Is a copy of the MS4 SWPPP acceptance Form available on site and accessible for viewing?	Yes
3. Is an up to date copy of the signed SWPPP retained at the construction site?	Yes
4. Is a copy of the SPDES General Permit retained at the construction site?	Yes
5. Does the SWPPP identify the contractor(s) and subcontractor(s) responsible for each measure?	Yes
6. Does the SWPPP identify at least one trained individual from each contractor(s) and subcontractor(s) companies?	Yes
7. Does the SWPPP include all the necessary Contractor Certification Statements and signatures?	Yes
8. Are copies of the previous inspections included in the ledger?	Yes
9. Are modification reports and stabilization records in the ledger and up to date?	Yes

E&SC Measures and Permanent Practices	Status	% Sediment	Map ID	PIC ID	Comments	Contractor Completion Date
Sediment Fences	Adequate					
Construction Entrances	Adequate					
Diversion Berm and Swales	Adequate					
Inlet protection	Adequate					
Soil stabilization	Adequate					

Detention Basin	Adequate					
Stone Check Dams	Adequate					
Excavation Dewatering	Adequate					
Concrete Washout	Adequate					

SWPPP Modification Required:	No
SWPPP Modification Comments:	
General Inspection Comments:	Site has achieved 80% vegetated in all areas
Other Report Recipients:	
View Map/Picture PDF:	View

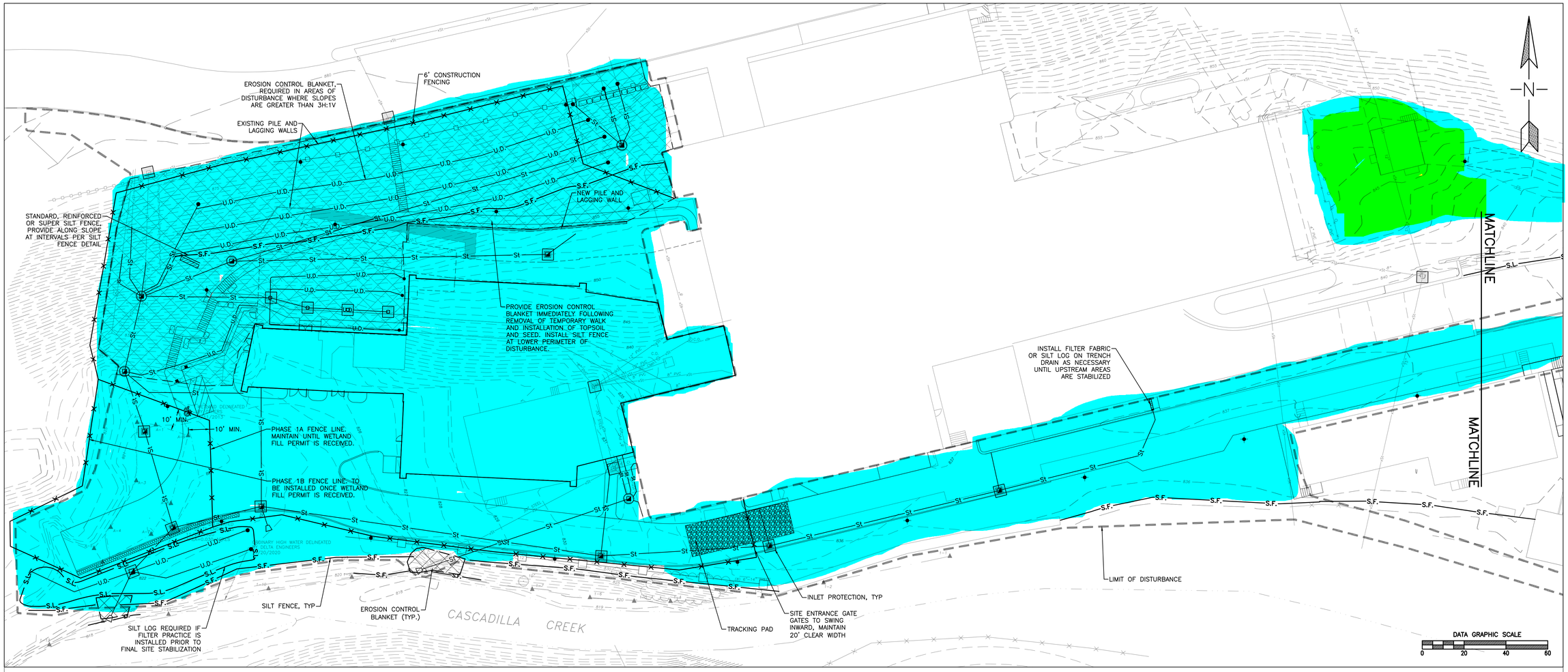

Disturbed areas (incl. Planned work)	
Inactive disturbed areas (>14 days)	
Stabilized disturbed areas	
Area of concern	

Inspector Derek Franklin

Date _____

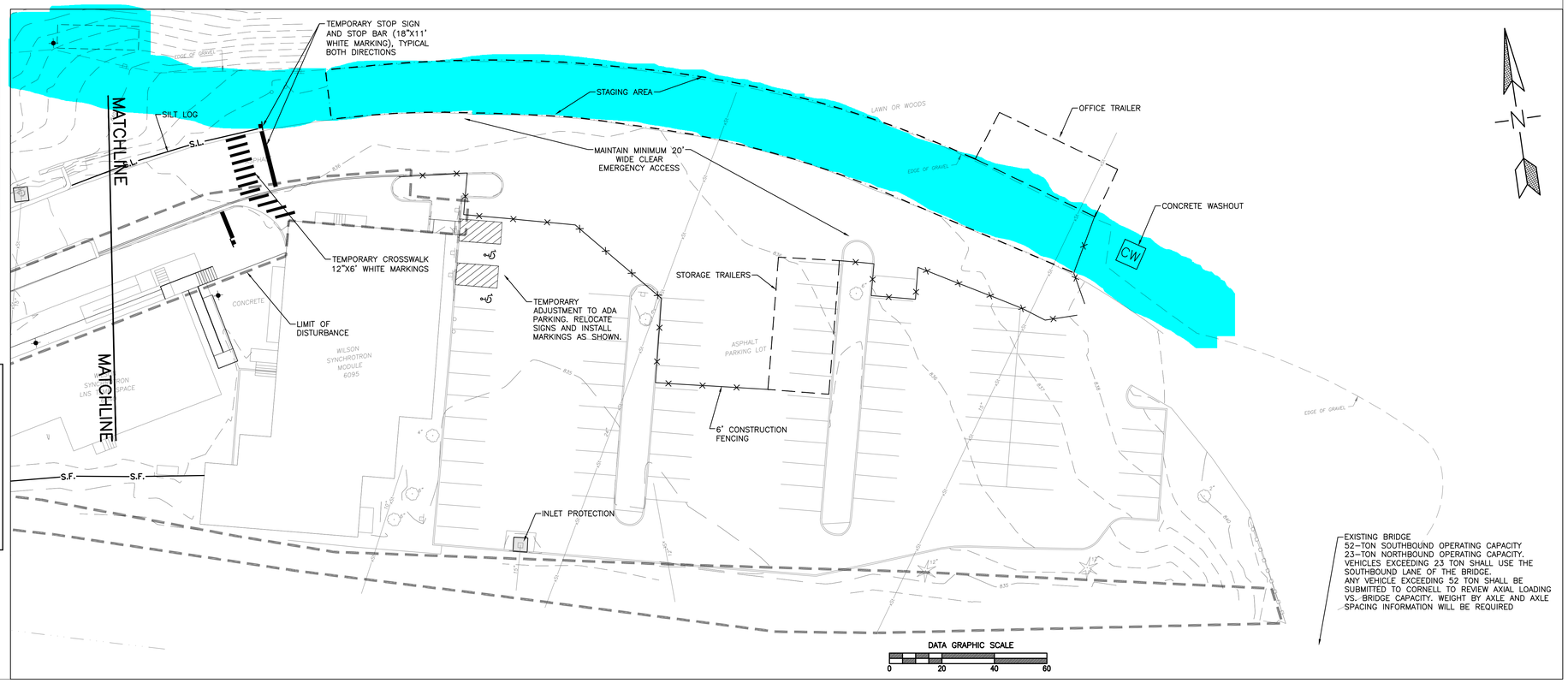

SWBR
387 East Main Street Rochester NY 14604
585 232 8300 | rochester@swbr.com

T.G. MILLER, P.C.
ENGINEERS AND SURVEYORS
605 WEST STATE STREET, SUITE A
ITHACA, NEW YORK 14850
WWW.TGMILLERPC.COM
607-272-6477

WARNING: ALTERATIONS TO THIS MAP NOT CONFORMING TO SECTION 7209, SUBDIVISION 2, NEW YORK STATE EDUCATION LAW, ARE PROHIBITED BY LAW. ALL CERTIFICATIONS HEREON ARE VALID FOR THIS MAP AND COPIES THEREOF ONLY IF SAID MAP OR COPIES BEAR THE SEAL OF THE LICENSED PROFESSIONAL ENGINEER WHOSE SIGNATURE APPEARS HEREON.

STATE OF NEW YORK · FRANK L. SANTELLI · 068931 · LICENSED PROFESSIONAL ENGINEER

Drawn By:	SAS
Checked By:	FLS
Project Manager:	FLS

These documents and all the ideas, arrangements, designs and plans indicated thereon or presented thereby are owned by and remain the property of SWBR and no part thereof shall be utilized by any person, firm, or corporation for any purpose whatsoever except with the specific written permission of SWBR. All rights reserved. ©

Revisions

3-8-22	CONSTRUCTION FENCE

CHESS
New Experimental Hall
Synchrotron Drive
Ithaca, NY 14853
TG MILLER Project Number E20-41

Cornell University
Ithaca, NY 14853

C-103
EROSION AND SEDIMENT CONTROL PLAN

December 6, 2021

100% Construction Documents

Public

STORMWATER POLLUTION PREVENTION PLAN
INSPECTION REPORT

FORM 3

Construction Site: Namgyal Monastery – HHDL Library, Town of Ithaca, Tompkins County, New York

Project Name and Location: Namgyal Monastery – HHDL Library 201Tibet Dr, Ithaca, NY 14850 Municipality: Town of Ithaca County: Tompkins	Date: 08-09-2024	Week Ending: 08-10-2024
	Permit # (if any): **NYR20A134**	
	Entry Time: 1:25 PM	Exit Time: 1:45 PM
Name of SPDES Permittee: Ngawang Dhondup, Administrator Namgyal Monastery Institute of Buddhist Studies Phone Number: 607-272-2785	Inspection Type: ☐ Compliance ☐ Referral ☐ Complaint ☐ NOT ☐ Pre-Storm ☐ Storm ☐ Post-Storm ☒ Routine (Monthly)	
Weather/Storm Information: Rain, 76°F Time Elapsed Since Last Storm: 08-08-2024 Approximate Amount of precipitation: 0.04" of Rain		
On-site Representative(s) and Company(s): Bryan Westerfer- Edger Enterprises, Inc. Phone Number(s): (607) 481-4274		

Based on the results of the inspection, necessary control modifications shall be implemented within seven (7) calendar days. These reports shall be kept on site as part of the Storm Water Pollution Prevention Plan Ledger.

Ledger

	Yes	No	N/A	
1.	☒	☐	☐	Is a copy of the NOI and Acknowledgment Letter available on site and accessible for viewing?
2.	☒	☐	☐	Is a copy of the MS4 SWPPP Acceptance Form available on site and accessible for viewing?
3.	☒	☐	☐	Is an up-to-date copy of the signed SWPPP retained at the construction site?
4.	☒	☐	☐	Is a copy of the SPDES General Permit retained at the construction site?

SWPPP Content

	Yes	No	N/A	
5.	☒	☐	☐	Does the SWPPP identify the contractor(s) and subcontractor(s) responsible for each measure?
6.	☒	☐	☐	Does the SWPPP identify at least one trained individual from each contractor(s) and subcontractor(s) companies?
7.	☒	☐	☐	Does the SWPPP include all the necessary Contractor Certification Statements and signatures?
8.	☐	☒	☐	Are copies of previous inspections included in the ledger?
9.	☒	☐	☐	Are modification reports and stabilization records in the ledger and up-to-date?

Visual Observations

	Yes	No	N/A	
1.	☐	☐	☒	Are all erosion and sediment control measures installed properly? If not, record details on Page 3.
2.	☐	☐	☒	Are all erosion and sediment control measures being maintained properly? If not, record details on Page 3.
3.	☐	☐	☒	Was written authorization issued for any disturbance greater than 5 acres?
4.	☒	☐	☐	Have stabilization measures been implemented in inactive areas per Erosion and Sediment Control Standards? If not, record details on Page 3.
5.	☒	☐	☐	Are post-construction stormwater management practices constructed/installed correctly? If not, record details on Page 3.
6.	☒	☐	☐	Has final site stabilization been achieved and temporary E&SC measures removed prior to NOT submittal?
7.	☒	☐	☐	Was there a discharge from the site on the day of inspection? If so, record details on Page 3.
8.	☐	☒	☐	Is there evidence that a discharge caused or contributed to a violation of water quality standards? If so, record details on Page 3.

Inspection Areas (Structural)	Requires Attention?			Provide Location or Numeric Identification per Plan Sheet	Plan Modification Required?		Notes/Corrective Action Required *
	Yes	No	N/A		Yes	No	
Stabilized Entrance/Exit	☐	☒	☐		☐	☐	
Perimeter Silt Fence	☐	☒	☐		☐	☐	
Inlet Protection	☐	☒	☐		☐	☐	
Outlet Protection	☐	☒	☐		☐	☐	
Concrete Washout	☐	☒	☐		☐	☐	
Material Laydown/ Staging Area	☐	☒	☐		☐	☐	
Underground Storm Sewer	☐	☒	☐		☐	☐	
Discharge Locations (i.e., ditches)	☐	☒	☐		☐	☐	
Material Storage Areas	☐	☒	☐		☐	☐	
Waste Storage Areas	☐	☒	☐		☐	☐	
Temporary Sediment Trap	☐	☒	☐		☐	☐	
Permanent Stormwater Practices	☐	☒	☐		☐	☐	

* The contractor or subcontractor shall begin implementing the required corrective actions within one business day of the issuance of this report, and shall complete the corrective actions prior to the next routine inspection.

Water Quality Observations

Describe the discharge(s): location, source(s), impact on receiving water(s), etc.

Discharge was occurring from the existing storm water pond on site into a vegetated swale leading to roadside ditch on Rt 96.

Describe the quality of the receiving water(s) both upstream and downstream of the discharge

Discharge from the storm water pond appeared to be free of sediment, aggregates, and any other visible pollutants.

Describe any other water quality standards or permit violations

N/A

Additional Comments

-All previously disturbed areas have become stabilized with permanent vegetation since the last inspection.

☒ Sketch Attached
☒ Photographs Attached

Certification Statement:
"I certify under penalty of law that this document and all attachments were prepared under my direction or supervision in accordance with a system designed to assure that qualified personnel properly gathered and evaluated the information submitted. Based on my inquiry of the person or persons who manage the system, or those persons directly responsible for gathering information, the information submitted is, to the best of my knowledge and belief, true, accurate, and complete. I am aware that there are significant penalties for submitting false information, including the possibility of fine and imprisonment for knowing violations."

Name of Qualified Inspector: Marcus Haider	**Name of Qualified Professional:** Frank L. Santelli, P.E.
Signature:	**Signature:**

MAINTAIN 20' MIN ACCESS DRIVE FOR EMERGENCY VEHICLES

STAGING AREA

ROCK CHECK DAM

RIP-RAP OUTLET PROTECTION (TYP.) SEE SHEET C201

INLET PROTECTION, IN PAVEMENT (TYP.)

TIBET DRIVE

TRACKING PAD

SILT LOG REQUIRED IF FILTER PRACTICE IS INSTALLED PRIOR TO FINAL SITE STABILIZATION

SILT FENCE (TYP.)

CONCRETE WASHOUT. CONFIRM LOCATION WITH TOWN AND OWNER. RELOCATE OR PROVIDE AT ADDITIONAL LOCATIONS AS NECESSARY

INLET PROTECTION, IN LANDSCAPE (TYP.)

EXTEND EXISTING STORM PIPE PRIOR TO PLACING FILL

LIMIT OF ONSITE SPOILS DISPOSAL AREA. MAINTAIN DRAINAGE PATTERN DOWN TOWARDS WEST. DO NOT FILL WITHIN EXISTING DRAINAGE CHANNELS. REDUCE BANK SLOPE ONLY. INSTALL REINFORCED SILT FENCE AT LOWER PERIMETER OF AREA PRIOR TO PLACING MATERIAL. INSTALL EROSION CONTROL BLANKET IMMEDIATELY FOLLOWING TOPSOIL AND SEEDING.

BIORETENTION FILTER
ESTIMATED WQV=1,260 CFT
REQUIRED SURFACE AREA=1,050SF
PRETREATMENT VOLUME REQUIRED=315CFT
TOTAL SYSTEM VOLUME REQUIRED=945CFT

INSTALL EMBANKMENT, EXCAVATE TO SUBGRADE AND INSTALL TEMPORARY SEDIMENT TRAP OUTLET PIPE AND RISER. SEE SEQUENCING NOTES

EROSION CONTROL BLANKET, REQUIRED IN AREAS OF DISTURBANCE WHERE SLOPES ARE GREATER THAN 3H:1V

MAIN BUILDING
201 TIBET DRIVE
FFE=1188.6±

ASPHALT PARKING

ASPHALT DRIVE

GRAVEL DRIVE

REMAINS OF GRAVEL PARKING AREA

ELEVATED WALKWAY

MATCHLINE

DATA GRAPHIC SCALE
0 20 40 60

HOLT ARCHITECTS
Architecture
Planning
Interior Design
619 W. State Street
Ithaca, New York 14850

132 E. Jefferson Street
Syracuse, New York 13202

p 607 273 7600 www.holt.com

WARNING: ALTERATIONS TO THIS MAP NOT CONFORMING TO SECTION 7209, SUBDIVISION 2, NEW YORK STATE EDUCATION LAW, ARE PROHIBITED BY LAW. ALL CERTIFICATIONS HEREON ARE VALID FOR THIS MAP AND COPIES THEREOF ONLY IF SAID MAP OR COPIES BEAR THE IMPRESSION SEAL OF THE LICENSED PROFESSIONAL ENGINEER WHOSE SIGNATURE APPEARS HEREON.

T.G. MILLER, P.C.
ENGINEERS AND SURVEYORS
605 WEST STATE STREET, SUITE A
ITHACA, NEW YORK 14850
WWW.TGMILLERPC.COM
607-272-6477

REVISION SCHEDULE	
NAME	DATE
SPOILS AREA	3/22/22

STATE OF NEW YORK
FRANK L. SANTORO
068931
PROFESSIONAL ENGINEER

NEW CONSTRUCTION NAMGYAL MONASTERY

HHDL LIBRARY
TIBET DRIVE, ITHACA, NEW YORK 14850

DATE:	11/03/2021
PROJECT:	2016066
OTHER:	TGM E20-28
DRAWN BY:	FLS

EROSION AND SEDIMENT CONTROL PLAN

C301B

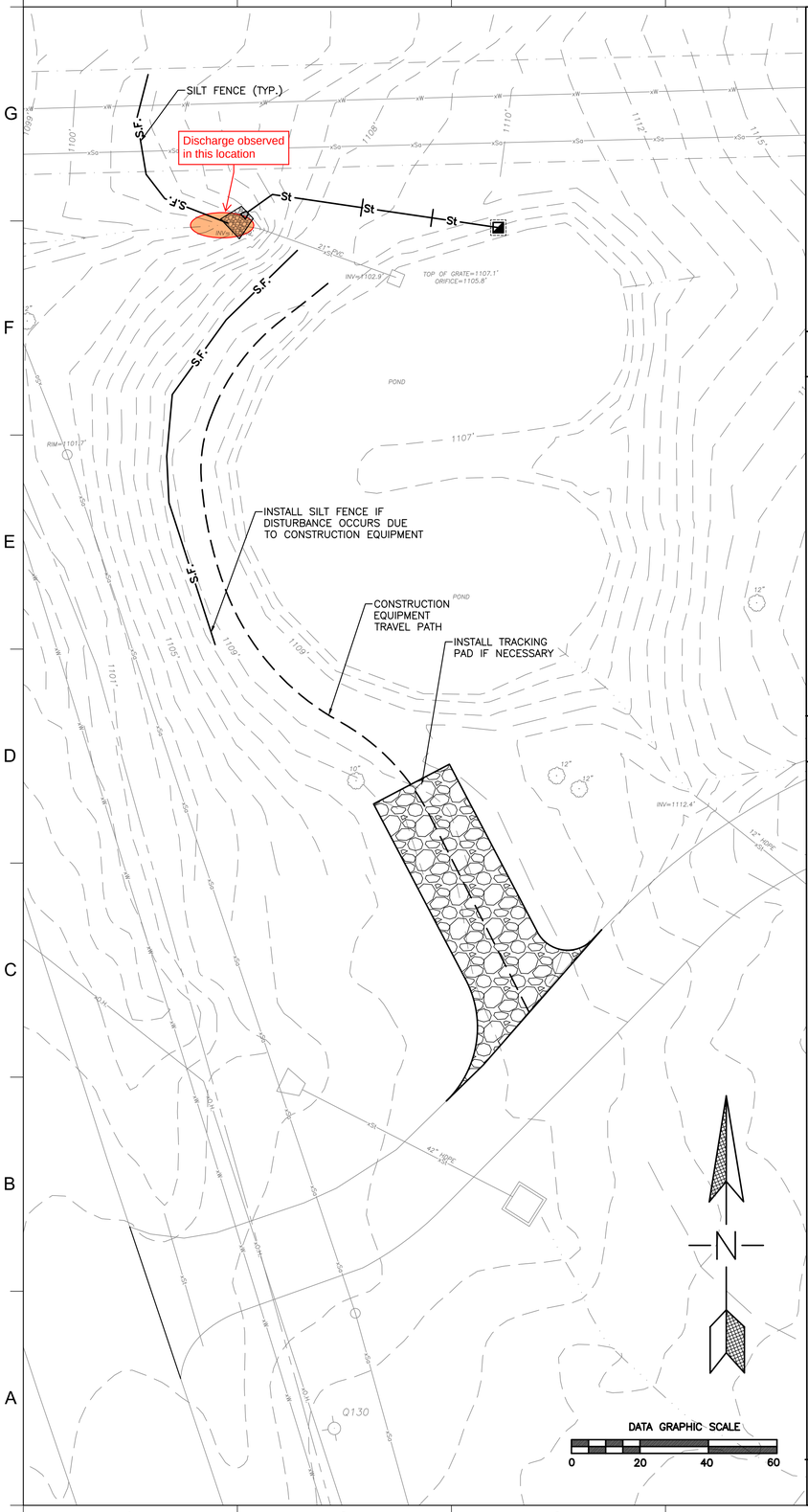

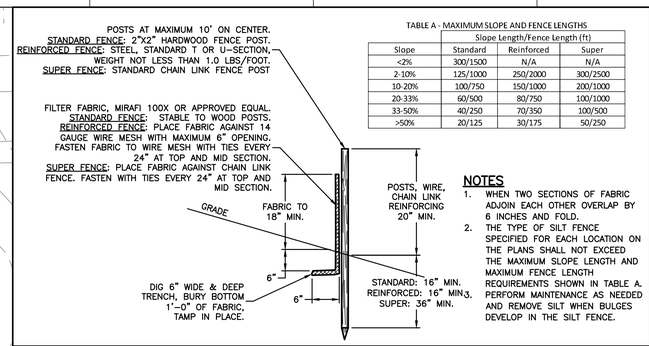

TABLE A - MAXIMUM SLOPE AND FENCE LENGTHS

	Slope Length/Fence Length (ft)		
Slope	Standard	Reinforced	Super
<2%	300/1500	N/A	N/A
2-10%	125/1000	250/2000	300/2500
10-20%	100/750	150/1000	200/1000
20-33%	60/500	80/750	100/1000
33-50%	40/250	70/350	100/500
>50%	20/125	30/175	50/250

NOTES

1. WHEN TWO SECTIONS OF FABRIC ADJOIN EACH OTHER OVERLAP BY 6 INCHES AND FOLD.
2. THE TYPE OF SILT FENCE SPECIFIED FOR EACH LOCATION ON THE PLANS SHALL NOT EXCEED THE MAXIMUM SLOPE LENGTH AND MAXIMUM FENCE LENGTH REQUIREMENTS SHOWN IN TABLE A.
3. PERFORM MAINTENANCE AS NEEDED AND REMOVE SILT WHEN BULGES DEVELOP IN THE SILT FENCE.

1 SILT FENCE

NOT TO SCALE

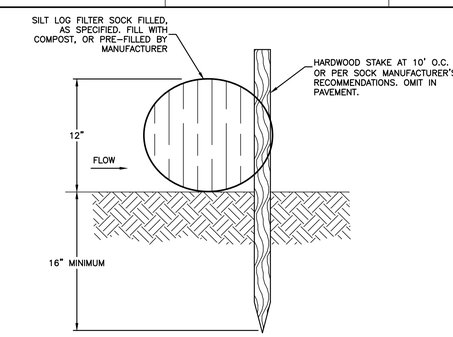

2 SILT LOG

NOT TO SCALE

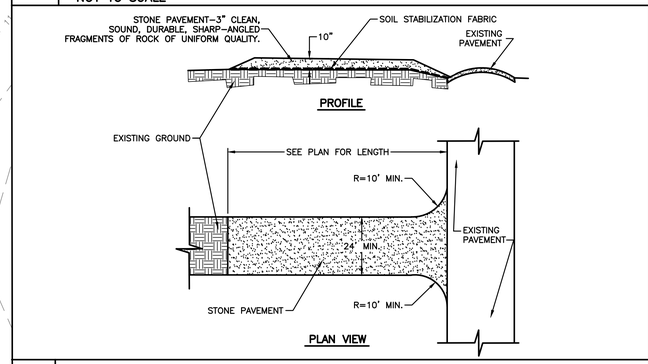

3 TRACKING PAD

NOT TO SCALE

NOTES:

1. AREA UNDER EMBANKMENT TO BE CLEARED, GRUBBED AND STRIPPED OF ANY VEGETATION AND ROOT MATERIALS.
2. EMBANKMENT FILL TO BE COMPACTED ON-SITE OR IMPORTED SELECT FILL.
3. BED AND BACKFILL AROUND OUTLET PIPE WITH SELECT FILL COMPACTED IN MAXIMUM 4" LIFTS.
4. VOLUME TO BE MINIMUM OF 3,600 CF PER ACRE OF CATCHMENT AREA.
5. INSPECT WEEKLY AND REPAIR AS NECESSARY.
6. FILL SLOPES ARE TO BE 2:1 OR FLATTER AND CUT SLOPES 1:1 OR FLATTER.
7. ALL PIPE CONNECTIONS ARE TO BE WATERTIGHT.
8. PERFORATE THE TOP 2/3 OF RISER PIPE WITH 1" DIAMETER HOLES SPACED EVERY 6" HORIZONALLY AND VERTICALLY IN CONCAVE PORTION OF PIPE. STOP PERFORATIONS AT 6" ABOVE BEND FITTING.
9. WRAP RISER PIPE WITH 1/4" TO 1/2" HARDWARE CLOTH WIRE AND THEN FILTER FABRIC. OVERLAP FILTER FABRIC A MINIMUM 12", FOLD AND STAPLE. ATTACH TO RISER PIPE WITH STRAPS OR BANDS AT 6" ABOVE AND 6" BELOW PERFORATIONS TO PREVENT BYPASS.
10. MAXIMUM DRAINAGE AREA: 5 ACRES

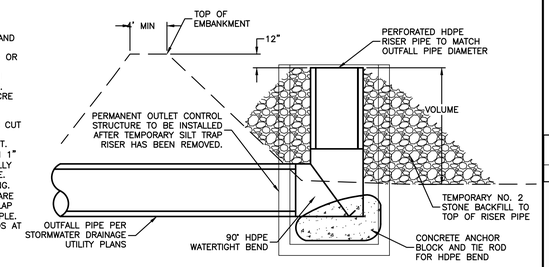

4 SEDIMENT TRAP OUTLET PIPE AND RISER

NOT TO SCALE

CONSTRUCTION SPECIFICATIONS

1. LOCATE WASHOUT STRUCTURE A MINIMUM OF 100 FEET AWAY FROM OPEN CHANNELS, STORM DRAIN INLETS, SENSITIVE AREAS, WETLANDS, BUFFERS AND WATER COURSES AND AWAY FROM CONSTRUCTION TRAFFIC.
2. SIZE WASHOUT STRUCTURE FOR VOLUME NECESSARY TO CONTAIN WASH WATER, SOLIDS AND RAINFALL AND MAINTAIN AT LEAST 4 INCHES OF FREEBOARD. TYPICAL DIMENSIONS ARE 10 FEET X 10 FEET X 3 FEET DEEP.
3. PREPARE SOIL BASE FREE OF ROCKS OR OTHER DEBRIS THAT MAY CAUSE TEARS OR HOLES IN THE LINER. FOR LINER, USE 10 MIL OR THICKER UV RESISTANT, IMPERMEABLE SHEETING, FREE OF HOLES AND TEARS OR OTHER DEFECTS THAT COMPROMISE IMPERMEABILITY OF THE MATERIAL.
4. PROVIDE A SIGN FOR THE WASHOUT IN CLOSE PROXIMITY TO THE FACILITY.
5. KEEP CONCRETE WASHOUT STRUCTURE WATER TIGHT. REPLACE IMPERMEABLE LINER IF DAMAGED (E.G., RIPPED OR PUNCTURED). EMPTY OR REPLACE WASHOUT STRUCTURE THAT IS 75 PERCENT FULL, AND DISPOSE OF ACCUMULATED MATERIAL PROPERLY. DO NOT REUSE PLASTIC LINER. WET-VACUUM STORED LIQUIDS THAT HAVE NOT EVAPORATED AND DISPOSE OF IN AN APPROVED MANNER. PRIOR TO FORECASTED RAINSTORMS, REMOVE LIQUIDS OR COVER STRUCTURE TO PREVENT OVERFLOWS. REMOVE HARDENED SOLIDS, WHOLE OR BROKEN UP, FOR DISPOSAL OR RECYCLING. MAINTAIN RUNOFF DIVERSION AROUND EXCAVATED WASHOUT STRUCTURE UNTIL STRUCTURE IS REMOVED.
6. DURABLE PORTABLE CONCRETE WASHOUT BASINS OR TUBS MAY BE USED WITH THE APPROVAL OF THE EROSION CONTROL INSPECTOR.

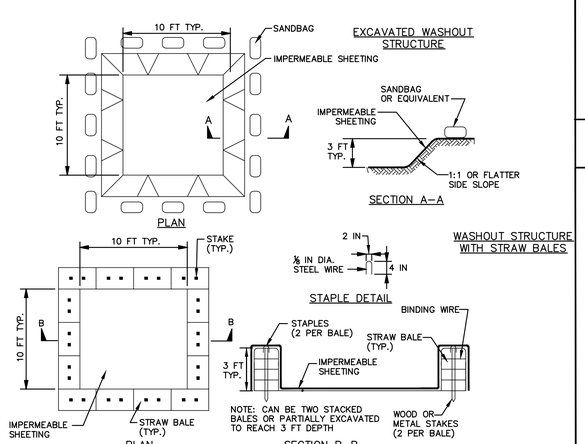

5 CONCRETE WASHOUT

NOT TO SCALE

NOTES:

- FILTER FABRIC TO BE CUT FROM CONTINUOUS ROLL TO ELIMINATE JOINTS. IF JOINTS ARE NECESSARY, OVERLAP TO EXTEND TO NEXT STAKE.
- SPACE STAKES EVENLY AROUND DRAINAGE STRUCTURE AT MAXIMUM 3' INTERVALS AND DRIVE TO MINIMUM 18" DEPTH INTO SOIL.
- FILTER FABRIC TO BE SECURELY FASTENED TO LUMBER FRAME AND SHALL BE EMBEDDED A MINIMUM 12" INTO SOIL.

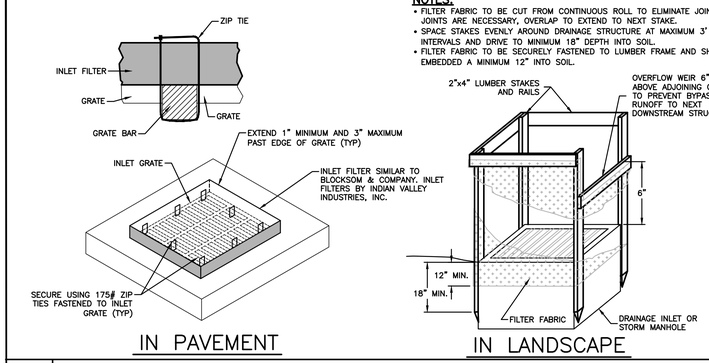

6 INLET PROTECTION

NOT TO SCALE

CONSTRUCTION SPECIFICATIONS

1. STONE WILL BE PLACED ON A FILTER FABRIC FOUNDATION TO THE LINES, GRADES AND LOCATIONS SHOWN IN THE PLAN.
2. EXTEND THE STONE A MINIMUM OF 1.5 FEET BEYOND THE DITCH BANKS TO PREVENT CUTTING AROUND THE DAM
3. ENSURE THAT CHANNEL APPURTENANCES SUCH AS CULVERT ENTRANCES BELOW CHECK DAMS ARE NOT SUBJECT TO DAMAGE OR BLOCKAGE FROM DISPLACED STONE.
4. MAXIMUM DRAINAGE AREA: 2 ACRES

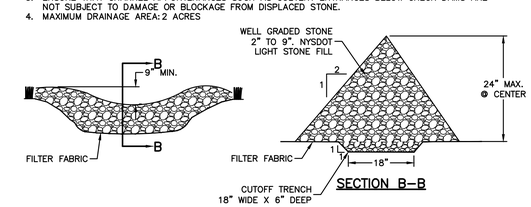

6 ROCK CHECK DAM

NOT TO SCALE

HOLT ARCHITECTS

Architecture
Planning
Interior Design

619 W. State Street
Ithaca, New York 14850

132 E. Jefferson Street
Syracuse, New York 13202

p 607 273 7600 www.holt.com

WARNING: ALTERATIONS TO THIS MAP NOT CONFORMING TO SECTION 7209, SUBDIVISION 2, NEW YORK STATE EDUCATION LAW, ARE PROHIBITED BY LAW. ALL CERTIFICATIONS HEREON ARE VALID FOR THIS MAP AND COPIES THEREOF ONLY IF SAID MAP OR COPIES BEAR THE IMPRESSION SEAL OF THE LICENSED PROFESSIONAL ENGINEER WHOSE SIGNATURE APPEARS HEREON.

T.G. MILLER, P.C.
ENGINEERS AND SURVEYORS
605 WEST STATE STREET, SUITE A
ITHACA, NEW YORK 14850
WWW.TGMILLERPC.COM
607-272-6477

REVISION SCHEDULE

NAME	DATE

STATE OF NEW YORK · FRANK L. SANTORO · 068931 · LICENSED PROFESSIONAL ENGINEER

NEW CONSTRUCTION
NAMGYAL MONASTERY
HHDL LIBRARY
TIBET DRIVE, ITHACA, NEW YORK 14850

DATE:	04/26/2021
PROJECT:	2016066
OTHER:	TGM E20-28
DRAWN BY:	FLS

EROSION AND SEDIMENT CONTROL PLAN

C302

PHOTO 1: Remaining area of disturbance has become vegetated.

PHOTO 2: Recommend removing the remaining, pictured, check dam and SWPPP mailbox.

SPDES General Permit for Stormwater
Runoff from Construction Activity

SWPPP Inspection Report

Project Name: Hungerford Hill Various Building Demo
Permit No: NYR11K550
Inspection Date/Time: 9/19/24 9:45 AM
Inspector: Derek Franklin (CPESC:5397)
Inspection Type:: Final Stabilization
Amount of Rainfall(in): 0
Weather Condition: Sunny
Soil Condition: Dry
Report Signatory: Kissinger, Rachel
Inspection Report Recipients: Bugis, Kara |

Open Issues From Previous Inspection(s)

Report ID	General Site Conditions	Response	Map ID	Pic ID	Date Reported	Date Completed
~~32883~~	~~Are stabilization measures lacking in inactive areas?~~	~~YES~~			~~07-23-24 2:15 PM (58 days ago)~~	~~Uncorrected~~
~~32906~~	~~Are stabilization measures lacking in inactive areas?~~	~~YES~~			~~07-26-24 2:30 PM (55 days ago)~~	~~Uncorrected~~

Inspection Report

General Site Conditions	Response	Map ID	Pic ID	Contractor Completion Date
1. Is there evidence that site runoff is causing a substantial visible contrast to natural conditions at any discharge points from the site or points of discharge to natural surface waterbodies on, or immediately adjacent to, the site?	No			
2. Is construction impacting adjacent property or roadways?	No			
3. Is there evidence of any releases to the environment?	No			
4. Is dust control needed?	No			
5. Are more than 5 acres disturbed and not approved by DEC?	No			
6. Are stabilization measures lacking in inactive areas?	No			
7. Are post-construction stormwater management practices constructed/installed incorrectly? If yes specific deficiency listed below.	No			
8. SWPPP measure construction is out of sequence?	No			

Ledger	Response
1. Is a copy of the NOI and Acknoledgement Letter available on site and accessible for viewing?	Yes
2. Is a copy of the MS4 SWPPP acceptance Form available on site and accessible for viewing?	Yes
3. Is an up to date copy of the signed SWPPP retained at the construction site?	Yes
4. Is a copy of the SPDES General Permit retained at the construction site?	Yes
5. Does the SWPPP identify the contractor(s) and subcontractor(s) responsible for each measure?	Yes
6. Does the SWPPP identify at least one trained individual from each contractor(s) and subcontractor(s) companies?	Yes
7. Does the SWPPP include all the necessary Contractor Certification Statements and signatures?	Yes
8. Are copies of the previous inspections included in the ledger?	Yes
9. Are modification reports and stabilization records in the ledger and up to date?	Yes

E&SC Measures and Permanent Practices	Status	% Sediment	Map ID	PIC ID	Comments	Contractor Completion Date
Sediment Fences	Adequate					
Construction Entrances	Adequate					
Inlet protection	Adequate					
Soil stabilization	Adequate					

SWPPP Modification Required:	No
SWPPP Modification Comments:	
General Inspection Comments:	Site has achieved final stabilization and bmps have been removed. Compost filter socks cut and spread out.
Other Report Recipients:	
View Map/Picture PDF:	View

6-4-2024

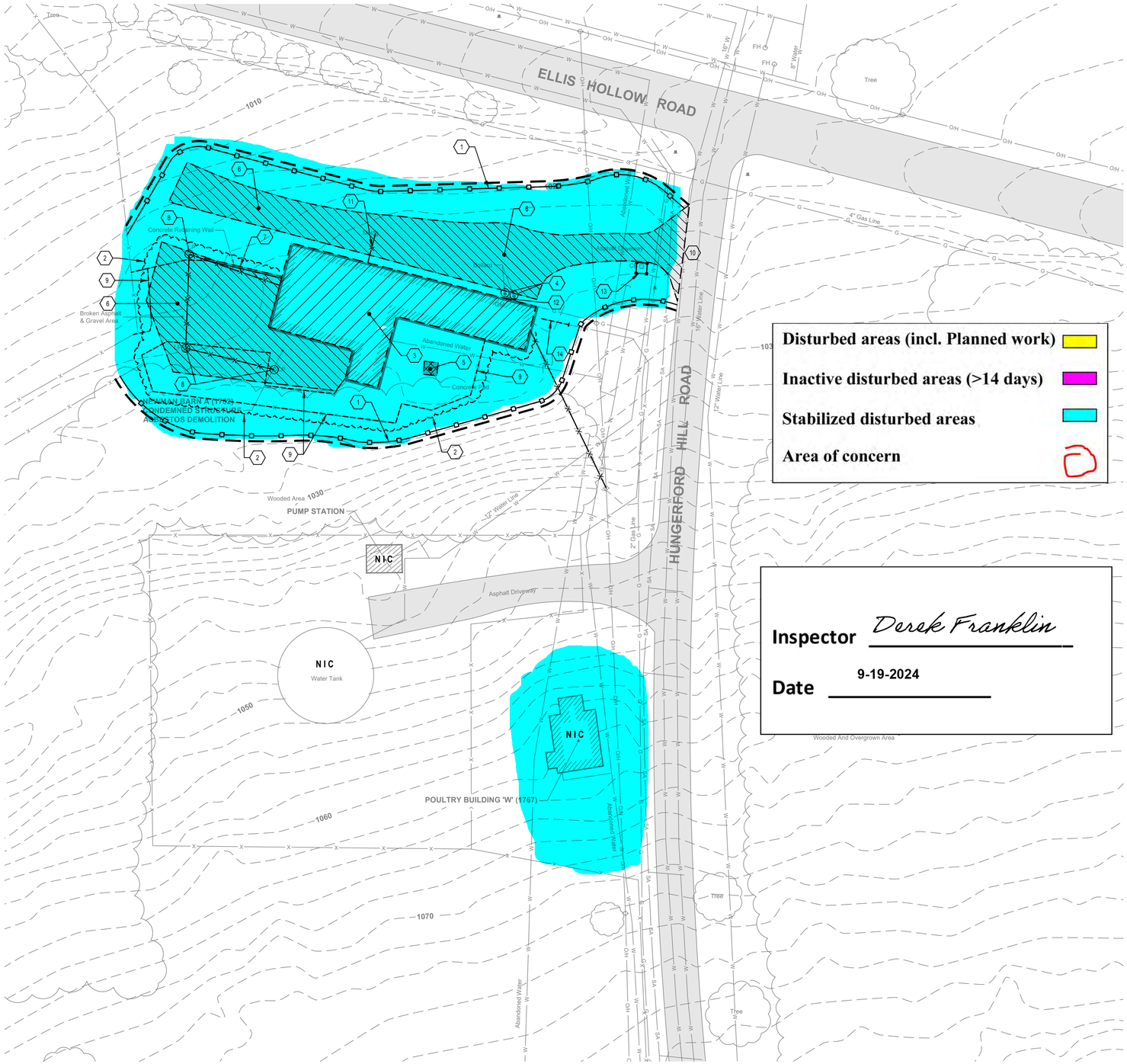

Inspector Derek Franklin

Date 9-19-2024

1 / C-100 **DEMOLITION PLAN (NORTH AREA)**

SCALE: 1" = 30'

NORTH

DEMOLITION LEGEND:	
UTILITY DEMOLITION	
BUILDING DEMOLITION	
PAVEMENT DEMOLITION	
CONCRETE DEMOLITION	
OTHER DEMOLITION	
SILT FENCE	
STABILIZED CONSTRUCTION ENTRANCE	
INLET PROTECTION	
WORK LIMITS LINE	
NOT IN CONTRACT	NIC
LIMITS OF CLEAR AND GRUB AREA	

#	REMOVAL KEY NOTES
1	PROVIDE SILT FENCE. SEE DETAIL 3/C-300.
2	CLEAR AND GRUB TREES AT BUILDING PERIMETER AND AROUND FENCE LINES TO BE REMOVED.
3	REMOVE ENTIRE STRUCTURE INCLUDING BUT NOT LIMITED TO FLOORS, WALLS AND FOUNDATIONS.
4	REMOVE EXISTING BOLLARDS.
5	REMOVE EXISTING CONCRETE SLAB IN ITS ENTIRETY. ESTIMATE 12" TOTAL DEPTH BELOWGROUND.
6	REMOVE EXISTING ASPHALT/ CONCRETE AND STONE PAVEMENT. ESTIMATE 8" TOTAL DEPTH BELOWGROUND.
7	REMOVE EXISTING CONCRETE RETAINING WALL AND FOOTER.
8	REMOVE EXISTING LIGHT POLE.
9	REMOVE EXISTING STEEL PIPE FENCING.
10	CONTRACTOR TO CLEAN, SWEEP AND REMOVE SEDIMENT BUILD-UP FROM PAVED ROADWAYS ADJACENT TO PROJECT SITE ON A REGULAR BASIS, AS NEEDED AND AS REQUESTED BY THE PROJECT MANAGER.
11	REMOVE PIPE IN ITS ENTIRETY AND BRICK AND MORTAR HOLE IN MANHOLE.
12	COORDINATE WITH NYSEG TO DISCONNECT THE EXISTING GAS.
13	PROVIDE INLET PROTECTION FOR EXISTING CATCH BASIN. SEE DETAIL 10/C-300.
14	TERMINATE WIRE FENCE 20' FROM BUILDING. PROTECT REMAINING WIRE FENCE.

HAZARDOUS MATERIALS ABATEMENT AND MANAGEMENT:

1. NEWMAN BARN "A" (1752): REFER TO HAZARDOUS MATERIALS SITE INSPECTION AND INVENTORY BY DELTA ENGINEERS, DATED MAY 14, 2019 AND INCLUDED AS PART OF THE SPECIFICATIONS.

2. CONTRACTOR SHALL REMOVE, HANDLE, PACKAGE AND DISPOSE ALL FLUORESCENT BULBS IN CONFORMANCE WITH THE CORNELL UNIVERSITY PROPER DISPOSAL OF LIGHT BULBS AT CORNELL UNIVERSITY'S ITHACA CAMPUS, DATED APRIL 16, 2014.

3. SPECIFIC WASTES AND MANAGEMENT/DISPOSAL CRITERIA:
   a. FLUORESCENT BULBS AND HIGH INTENSITY DISCHARGE (HID) BULBS (INTACT AND BROKEN, UNIVERSAL HAZARDOUS WASTE): CONTACT CORNELL'S R-5 OPERATIONS DEPARTMENT, MR. GEORGE WOOD AT (607) 254-1666 TO COORDINATE PACKAGING CONTAINERS, HANDLING, AND DISPOSITION OF ALL FLUORESCENT AND HID LIGHT BULBS.
   b. PESTICIDES (UNIVERSAL HAZARDOUS WASTE): CONTACT CORNELL'S ENVIRONMENTAL HEALTH AND SAFETY DEPARTMENT (607) 255-8200 TO COORDINATE PACKAGING CONTAINERS, HANDLING AND DISPOSITION OF PESTICIDES.
   c. MERCURY THERMOSTATS (UNIVERSAL HAZARDOUS WASTE): CONTACT CORNELL'S ENVIRONMENTAL HEALTH AND SAFETY DEPARTMENT (607) 255-8200 TO COORDINATE PACKAGING CONTAINERS, HANDLING AND DISPOSITION OF MERCURY THERMOSTATS.
   d. LIGHT FIXTURE BALLASTS (PCB DEBRIS): CONTACT CORNELL'S ENVIRONMENTAL HEALTH AND SAFETY DEPARTMENT (607)-8200 TO COORDINATE PACKAGING CONTAINERS, HANDLING AND DISPOSITION OF LIGHT FIXTURE BALLASTS.
   e. OIL&PETROLEUM PRODUCTS: CONTRACTOR SHALL ACCUMULATE OILS AND PETROLEUM PRODUCTS IN DRUM CONTAINER(S), AND ARRANGE WITH A PERMITTED HAULER TO DISPOSE PETROLEUM PRODUCTS AT A PERMITTED DISPOSAL FACILITY.
   f. REFRIGERANTS: CONTRACTOR SHALL RETAIN THE SERVICES OF A USEPA-CERTIFIED REFRIGERANT RECLAIMER TO COLLECT, PROPERLY CONTAIN, AND DISPOSE/RECYCLE ALL REFRIGERANTS IN AIR CONDITIONING AND REFRIGERATION UNITS.
   g. OTHER UNKNOWN PRODUCTS: CONTRACTOR SHALL COLLECT AND STORE OTHER UNKNOWN MATERIALS, AND ARRANGE WITH A PERMITTED HAULER TO CHARACTERIZE, TRANSPORT AND PROPERLY DISPOSE UNKNOWN PRODUCTS AT A PERMITTED DISPOSAL FACILITY. DO NOT COMINGLE UNKNOWN CHEMICAL PRODUCTS.

4. LEAD PAINT SURVEY REPORTS ADDRESSING PAINTED SURFACES AND BUILDING COMPONENTS AT THE EIGHT (8) "NON-CONDEMNED" STRUCTURES ARE PROVIDED IN SPECIFICATION SECTION 01 35 29 - GENERAL HEALTH AND SAFETY REQUIREMENTS. VARIOUS SURFACES AND BUILDING COMPONENTS OF NEWMAN BARN A 1752 ARE COATED WITH LEAD-BASED PAINT. ALL WORK ASSOCIATED WITH THE DISTURBANCE OF LEAD-BASED PAINT SHALL BE PERFORMED IN ACCORDANCE WITH THE OSHA "LEAD EXPOSURE IN CONSTRUCTION: INTERIM FINAL RULE 29 CFR 1926.62". ALL CONTRACTORS SHALL UTILIZE APPROVED WORK PRACTICES, PROCEDURES AND EQUIPMENT AS REQUIRED TO LIMIT OCCUPATIONAL AND ENVIRONMENTAL EXPOSURE TO LEAD WHEN SURFACES/COMPONENTS COATED WITH LEAD CONTAINING PAINT ARE IMPACTED. ALL WASTE/DEBRIS GENERATED BY DEMOLITION OPERATIONS SHALL BE PROPERLY DISPOSED OF.

0' 15' 30' 60'

SCALE: 1" = 30'

EXISTING LEGEND:

- Denotes Existing Power Pole
- LP Denotes Existing Light Pole
- MH Denotes Existing Manhole
- O/H Denotes Overhead Electric Line
- X Denotes Fence Line
- Denotes Existing Sign
- 1020 Denotes Existing Ground Contour
- Denotes Existing Bollard
- GM Denotes Existing Gas Meter
- Denotes Existing Square Catch Basin
- Denotes Existing Concrete Area
- Denotes Existing Asphalt Pavement

Key Plan

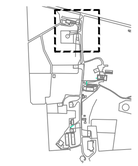

NORTH

SCALE: 1" = 1000'

No.	Revision	Date

Project Name

SUCF NO. 191016
DEMOLITION OF FACILITIES
AT HUNGERFORD HILL

ITHACA, NEW YORK

DELTA ENGINEERS, ARCHITECTS, & LAND SURVEYORS
860 Hooper Road
Endwell, New York 13760
Tel: 607.231.6600
Fax: 607.231.6650
Email: mail@delta-eas.com
www.delta-eas.com

Seal

STATE OF NEW YORK · WILLIAM C. HIGGINS · 073447 · LICENSED PROFESSIONAL ENGINEER

Phase 100% CONSTRUCTION DOCUMENTS

Project No. 2019.011.001

UNAUTHORIZED ALTERATION OF THIS DRAWING IS A VIOLATION OF THE NEW YORK STATE EDUCATION LAW, SECTION 7209, SUBDIVISION 2.

Date 2022.08.01

Drawing Title

DEMOLITION PLAN
(NORTH AREA)

Drawing No.

C-100

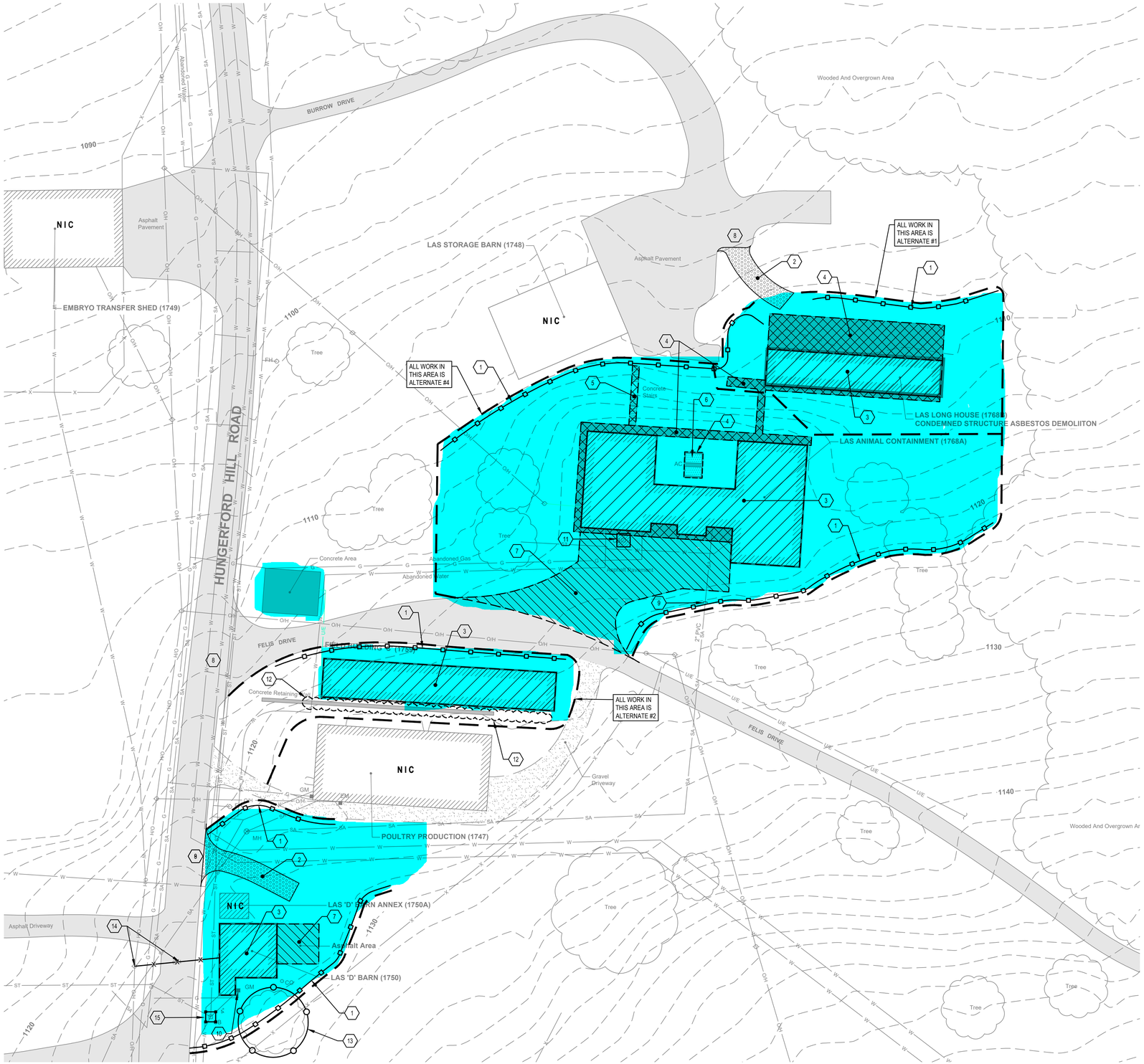

1 C-101 **DEMOLITION PLAN (CENTRAL AREA)**
SCALE: 1" = 30'

NORTH

0' 15' 30' 60'
SCALE: 1" = 30'

DEMOLITION LEGEND:	
UTILITY DEMOLITION	
BUILDING DEMOLITION	
PAVEMENT DEMOLITION	
CONCRETE DEMOLITION	
OTHER DEMOLITION	
SILT FENCE	
STABILIZED CONSTRUCTION ENTRANCE	
WORK LIMITS LINE	
INLET PROTECTION	
INLET PROTECTION ON ASPHALT	
NOT IN CONTRACT	NIC
LIMITS OF CLEAR AND GRUB AREA	
TREE PROTECTION	

#	REMOVAL KEY NOTES
1	PROVIDE SILT FENCE. SEE DETAIL 3/C-300.
2	PROVIDE STABILIZED CONSTRUCTION ENTRANCE.SEE DETAIL 5/C-300.
3	REMOVE ENTIRE STRUCTURE INCLUDING BUT NOT LIMITED TO FLOORS, WALLS AND FOUNDATIONS.
4	REMOVE EXISTING CONCRETE WALK / CONCRETE SLAB. ESTIMATE DEPTH 12" BELOW GROUND SURFACE.
5	REMOVE EXISTING CONCRETE WALK AND STAIRS. ESTIMATE DEPTH 8" BELOW GROUND SURFACE.
6	REMOVE AND DISPOSE OF REFRIGERANT PROPERLY.
7	REMOVE EXITING ASPHALT PAVEMENT. ESTIMATE DEPTH 8" BELOW GROUND SURFACE.
8	CONTRACTOR TO CLEAN, SWEEP AND REMOVE SEDIMENT BUILD-UP FROM PAVED ROADWAYS ADJACENT TO PROJECT SITE ON A REGULAR BASIS, AS NEEDED AND AS REQUESTED BY THE PROJECT MANAGER.
9	CUT AND CAP SANITARY LINE AT WORK LIMITS. SEE DETAIL 8/C-300.
10	COORDINATE WITH NYSEG TO DISCONNECT AND REMOVE EXISTING GAS.
11	PROVIDE INLET PROTECTION FOR EXISTING CATCH BASIN. SEE DETAIL 1/C-300.
12	CLEAR AND GRUB TREES AND BRUSH.
13	PROVIDE TREE PROTECTION. SEE DETAIL 7/C-300.
14	DISCONNECT/ REMOVE ELECTRIC AND TELECOM AT POLE.
15	PROVIDE INLET PROTECTION FOR EXISTING CATCH BASIN. SEE DETAIL 10/C-300

HAZARDOUS MATERIALS ABATEMENT AND MANAGEMENT:

1. LAS "D" BARN (1750): REFER TO HAZARDOUS MATERIALS SITE INSPECTION AND INVENTORY BY DELTA ENGINEERS, DATED MAY 14, 2019 AND INCLUDED AS PART OF THE SPECIFICATIONS.
2. CONTRACTOR SHALL REMOVE, HANDLE, PACKAGE AND DISPOSE ALL FLUORESCENT BULBS IN CONFORMANCE WITH THE CORNELL UNIVERSITY PROPER DISPOSAL OF LIGHT BULBS AT CORNELL UNIVERSITY'S ITHACA CAMPUS, DATED APRIL 16, 2014.
3. SPECIFIC WASTES AND MANAGEMENT/DISPOSAL CRITERIA:
   a. FLUORESCENT BULBS AND HIGH INTENSITY DISCHARGE (HID) BULBS (INTACT AND BROKEN, UNIVERSAL HAZARDOUS WASTE): CONTACT CORNELL'S R-5 OPERATIONS DEPARTMENT, MR. GEORGE WOOD AT (607) 254-1666 TO COORDINATE PACKAGING CONTAINERS, HANDLING, AND DISPOSITION OF ALL FLUORESCENT AND HID LIGHT BULBS.
   b. PESTICIDES (UNIVERSAL HAZARDOUS WASTE): CONTACT CORNELL'S ENVIRONMENTAL HEALTH AND SAFETY DEPARTMENT (607) 255-8200 TO COORDINATE PACKAGING CONTAINERS, HANDLING AND DISPOSITION OF PESTICIDES.
   c. MERCURY THERMOSTATS (UNIVERSAL HAZARDOUS WASTE): CONTACT CORNELL'S ENVIRONMENTAL HEALTH AND SAFETY DEPARTMENT (607) 255-8200 TO COORDINATE PACKAGING CONTAINERS, HANDLING AND DISPOSITION OF MERCURY THERMOSTATS.
   d. LIGHT FIXTURE BALLASTS (PCB DEBRIS): CONTACT CORNELL'S ENVIRONMENTAL HEALTH AND SAFETY DEPARTMENT (607)-8200 TO COORDINATE PACKAGING CONTAINERS, HANDLING AND DISPOSITION OF LIGHT FIXTURE BALLASTS.
   e. OILS/PETROLEUM PRODUCTS: CONTRACTOR SHALL ACCUMULATE OILS AND PETROLEUM PRODUCTS IN DRUM CONTAINER(S), AND ARRANGE WITH A PERMITTED HAULER TO DISPOSE PETROLEUM PRODUCTS AT A PERMITTED DISPOSAL FACILITY.
   f. REFRIGERANTS: CONTRACTOR SHALL RETAIN THE SERVICES OF A USEPA-CERTIFIED REFRIGERANT RECLAIMER TO COLLECT, PROPERLY CONTAIN, AND DISPOSE/RECYCLE ALL REFRIGERANTS IN AIR CONDITIONING AND REFRIGERATION UNITS.
   g. OTHER UNKNOWN PRODUCTS: CONTRACTOR SHALL COLLECT AND STORE OTHER UNKNOWN MATERIALS, AND ARRANGE WITH A PERMITTED HAULER TO CHARACTERIZE, TRANSPORT AND PROPERLY DISPOSE UNKNOWN PRODUCTS AT A PERMITTED DISPOSAL FACILITY. DO NOT COMINGLE UNKNOWN CHEMICAL PRODUCTS.
4. LEAD PAINT SURVEY REPORTS ADDRESSING PAINTED SURFACES AND BUILDING COMPONENTS AT THE "NON-CONDEMNED" STRUCTURES ARE PROVIDED IN SPECIFICATION SECTION 01 35 29 - GENERAL HEALTH AND SAFETY REQUIREMENTS. VARIOUS SURFACES AND BUILDING COMPONENTS AT TWO (2) OF THE STRUCTURE ON THIS SHEET (LAS D BARN 1750) COATED WITH LEAD-BASED PAINT . ALL WORK ASSOCIATED WITH THE DISTURBANCE OF LEAD-BASED PAINT SHALL BE PERFORMED IN ACCORDANCE WITH THE OSHA "LEAD EXPOSURE IN CONSTRUCTION: INTERIM FINAL RULE 29 CFR 1926.62". ALL CONTRACTORS SHALL UTILIZE APPROVED WORK PRACTICES, PROCEDURES AND EQUIPMENT AS REQUIRED TO LIMIT OCCUPATIONAL AND ENVIRONMENTAL EXPOSURE TO LEAD WHEN SURFACES/COMPONENTS COATED WITH LEAD CONTAINING PAINT ARE IMPACTED. ALL WASTE/DEBRIS GENERATED BY DEMOLITION OPERATIONS SHALL BE PROPERLY DISPOSED OF.

EXISTING LEGEND:

- Denotes Existing Power Pole
- FH Denotes Existing Fire Hydrant
- MH Denotes Existing Manhole
- W Denotes Water Line
- ST Denotes Storm Sewer Line
- SA Denotes Sanitary Sewer Line
- O/H Denotes Overhead Electric Line
- U/E Denotes Underground Electric Line
- X Denotes Fence Line
- 1110 Denotes Existing Ground Contour
- AC Denotes Existing Air Conditioning Unit
- EM Denotes Existing Electric Meter
- GM Denotes Existing Gas Meter
- CO Denotes Existing Sewer Cleanout
- Denotes Existing Square Catch Basin
- Denotes Existing Gravel Area
- Denotes Existing Concrete Area
- Denotes Existing Asphalt Pavement

Key Plan

NORTH

SCALE: 1" = 1000'

No.	Revision	Date

Project Name

SUCF NO. 191016
DEMOLITION OF FACILITIES
AT HUNGERFORD HILL

ITHACA, NEW YORK

DELTA
ENGINEERS, ARCHITECTS, & LAND SURVEYORS
860 Hooper Road
Endwell, New York 13760
Tel: 607.231.6600
Fax: 607.231.6650
Email: mail@delta-eas.com
www.delta-eas.com

Seal

STATE OF NEW YORK · WILLIAM C. NIOCHE · 73447 · LICENSED PROFESSIONAL ENGINEER

Phase 100% CONSTRUCTION DOCUMENTS

Project No. 2019.011.001

UNAUTHORIZED ALTERATION OF THIS DRAWING IS A VIOLATION OF THE NEW YORK STATE EDUCATION LAW, SECTION 7209, SUBDIVISION 2.

Date 2022.08.01

Drawing Title

DEMOLITION PLAN
(CENTRAL AREA)

Drawing No.

C-101

DEMOLITION LEGEND:	
UTILITY DEMOLITION	—X—X—X—X—
BUILDING DEMOLITION	
PAVEMENT DEMOLITION	
CONCRETE DEMOLITION	
OTHER DEMOLITION	
SILT FENCE	
STABILIZED CONSTRUCTION ENTRANCE	
WORK LIMITS LINE	
NOT IN CONTRACT	NIC
TREE PROTECTION	

1 C-102 **DEMOLITION PLAN (SOUTH AREA)**

SCALE: 1" = 30'

NORTH

#	REMOVAL KEY NOTES
1	PROVIDE SILT FENCE. SEE DETAIL 3/C-300.
2	PROVIDE STABILIZED CONSTRUCTION ENTRANCE.SEE DETAIL 5/C-300.
3	REMOVE ENTIRE STRUCTURE INCLUDING BUT NOT LIMITED TO FLOORS, WALLS AND FOUNDATIONS.
4	REMOVE EXISTING SHED, ROOF AND CONCRETE PAD. ESTIMATE 12" BELOW GROUND SURFACE.
5	REMOVE EXISTING CONCRETE RETAINING WALL.
6	REMOVE EXISTING CONCRETE SLAB. ESTIMATE 8" BELOW GROUND SURFACE.
7	REMOVE EXITING PAVEMENT. ESTIMATE 8" BELOW GROUND SURFACE.
8	REMOVE PORTION OF EXISTING FENCING.
9	CONTRACTOR TO CLEAN, SWEEP AND REMOVE SEDIMENT BUILD-UP FROM PAVED ROADWAYS ADJACENT TO PROJECT SITE ON A REGULAR BASIS, AS NEEDED AND AS REQUESTED BY THE PROJECT MANAGER.
10	COORDINATE WITH NYSEG TO DISCONNECT AND REMOVE EXISTING GAS LINE.
11	REMOVE AND DISPOSE OF REFRIGERANT PROPERLY.
12	CUT AND INFILL SANITARY SEWER AT WORK AREA LIMITS. SEE DETAIL 8/C-300.
13	VERIFY WATER SOURCE ABANDONED. CUT AND CAP AT MAXIMUM IF STILL IN SERVICE.
14	DISCONNECT/ REMOVE ELECTRIC AND TELECOM AT POLE.
15	CLEAR AND GRUB TREES AND BRUSH AT REAR OF BUILDING.
16	DISCONNECT/ REMOVE ELECTRIC SUPPLY TO BUILDING.
17	PROVIDE TREE PROTECTION. SEE DETAIL 7/C-300.
18	DO NOT DISTURB TRANSITE STORM DRAIN PIPE.

HAZARDOUS MATERIALS ABATEMENT AND MANAGEMENT:

1. VIBRIO BARN "G" (1757): NO POTENTIAL HAZARDOUS MATERIALS WERE OBSERVED IN VIBRIO BARN "G" (1757). REFER TO HAZARDOUS MATERIALS SITE INSPECTION AND INVENTORY BY DELTA ENGINEERS, DATED MAY 14, 2019 AND INCLUDED AS PART OF THE SPECIFICATIONS.
2. CONTRACTOR SHALL REMOVE, HANDLE, PACKAGE AND DISPOSE ALL FLUORESCENT BULBS IN CONFORMANCE WITH THE CORNELL UNIVERSITY PROPER DISPOSAL OF LIGHT BULBS AT CORNELL UNIVERSITY'S ITHACA CAMPUS, DATED APRIL 16, 2014.
3. SPECIFIC WASTES AND MANAGEMENT/DISPOSAL CRITERIA:
   a. FLUORESCENT BULBS AND HIGH INTENSITY DISCHARGE (HID) BULBS (INTACT AND BROKEN, UNIVERSAL HAZARDOUS WASTE): CONTACT CORNELL'S R-5 OPERATIONS DEPARTMENT, MR. GEORGE WOOD AT (607) 254-1666 TO COORDINATE PACKAGING CONTAINERS, HANDLING, AND DISPOSITION OF ALL FLUORESCENT AND HID LIGHT BULBS.
   b. PESTICIDES (UNIVERSAL HAZARDOUS WASTE): CONTACT CORNELL'S ENVIRONMENTAL HEALTH AND SAFETY DEPARTMENT (607) 255-8200 TO COORDINATE PACKAGING CONTAINERS, HANDLING AND DISPOSITION OF PESTICIDES.
   c. MERCURY THERMOSTATS (UNIVERSAL HAZARDOUS WASTE): CONTACT CORNELL'S ENVIRONMENTAL HEALTH AND SAFETY DEPARTMENT (607) 255-8200 TO COORDINATE PACKAGING CONTAINERS, HANDLING AND DISPOSITION OF MERCURY THERMOSTATS.
   d. LIGHT FIXTURE BALLASTS (PCB DEBRIS): CONTACT CORNELL'S ENVIRONMENTAL HEALTH AND SAFETY DEPARTMENT (607)-8200 TO COORDINATE PACKAGING CONTAINERS, HANDLING AND DISPOSITION OF LIGHT FIXTURE BALLASTS.
   e. OILS/PETROLEUM PRODUCTS: CONTRACTOR SHALL ACCUMULATE OILS AND PETROLEUM PRODUCTS IN DRUM CONTAINER(S), AND ARRANGE WITH A PERMITTED HAULER TO DISPOSE PETROLEUM PRODUCTS AT A PERMITTED DISPOSAL FACILITY.
   f. REFRIGERANTS: CONTRACTOR SHALL RETAIN THE SERVICES OF A USEPA-CERTIFIED REFRIGERANT RECLAIMER TO COLLECT, PROPERLY CONTAIN, AND DISPOSE/RECYCLE ALL REFRIGERANTS IN AIR CONDITIONING AND REFRIGERATION UNITS.
   g. OTHER UNKNOWN PRODUCTS: CONTRACTOR SHALL COLLECT AND STORE OTHER UNKNOWN MATERIALS, AND ARRANGE WITH A PERMITTED HAULER TO CHARACTERIZE, TRANSPORT AND PROPERLY DISPOSE UNKNOWN PRODUCTS AT A PERMITTED DISPOSAL FACILITY. DO NOT COMINGLE UNKNOWN CHEMICAL PRODUCTS.
4. LEAD PAINT SURVEY REPORTS ADDRESSING PAINTED SURFACES AND BUILDING COMPONENTS AT THE "NON-CONDEMNED" STRUCTURES ARE PROVIDED IN SPECIFICATION SECTION 01 35 29 - GENERAL HEALTH AND SAFETY REQUIREMENTS. NO LEAD BASED PAINT WAS IDENTIFIED IN THE STRUCTURES DEPICTED ON THIS SHEET.

0' 15' 30' 60'

SCALE: 1" = 30'

EXISTING LEGEND:

- Denotes Existing Valve
- Denotes Existing Power Pole
- Denotes Existing Fire Hydrant
- Denotes Existing Manhole
- Denotes Water Line
- Denotes Storm Sewer Line
- Denotes Sanitary Sewer Line
- Denotes Overhead Electric Line
- Denotes Fence Line
- Denotes Existing Ground Contour
- Denotes Existing Air Conditioning Unit
- Denotes Existing Electric Box
- Denotes Existing Concrete Area
- Denotes Existing Asphalt Pavement

Key Plan

NORTH

SCALE: 1" = 1000'

No.	Revision	Date

Project Name

SUCF NO. 191016
DEMOLITION OF FACILITIES
AT HUNGERFORD HILL

ITHACA, NEW YORK

DELTA ENGINEERS, ARCHITECTS, & LAND SURVEYORS
860 Hooper Road
Endwell, New York 13760
Tel: 607.231.6600
Fax: 607.231.6650
Email: mail@delta-eas.com
www.delta-eas.com

Seal

STATE OF NEW YORK · WILLIAM C. HIGGINS · 73447 · LICENSED PROFESSIONAL ENGINEER

Phase 100% CONSTRUCTION DOCUMENTS

Project No. 2019.011.001

UNAUTHORIZED ALTERATION OF THIS DRAWING IS A VIOLATION OF THE NEW YORK STATE EDUCATION LAW, SECTION 7209, SUBDIVISION 2.

Date 2022.08.01

Drawing Title

DEMOLITION PLAN
(SOUTH AREA)

Drawing No.

C-102

HUN
35

Stormwater Construction Site Inspection Report

Project Name and Location: Butterfield Stadium Redevelopment 953 Danby Road Ithaca, NY 14850 **NPDES Tracking No:** NYR11L136 **Municipality:** Town of Ithaca	**Date:** 6/26/24	**Report #:** 34
	Weather Conditions: Sunny	
	Soil Conditions: dry	
	Start Time: 12:00	**End Time:** 12:30
Qualified Inspector: **Name(s):** Robb Champlin **Title(s):** Project Manager	**Signature of Qualified Inspector:**	
Reviewed by: **Name(s):** James D. Catella **Title(s):** P.E.	**Signature of Reviewer:**	
Date of last Inspection: 5/29/24 **Notes:**		
Type of Inspection (circle all that apply): Routine	Post Storm Event	Final

Site Disturbance (Indicate locations on plans)

YES	NO	N/A	
	x		**Areas previously disturbed, but have not undergone active site work in the last 14 days? (7 if more than 5 acres have been disturbed)**
	x		**Areas disturbed within last 14 days? (7 if more than 5 acres have been disturbed)**
	x		**Areas expected to be disturbed in the next 14 days? (7 if more than 5 acres have been disturbed)**
	x		**Do areas of steep slopes or complex stabilization issues exist? If "YES" explain below.**
	x		**Are there currently more than 5 acres of disturbed soil at the site?**

Additional Comments: _____

Inspection of Erosion and Sediment control Practices

YES	NO	N/A	
	x		**Do any EnS BMP's require repair or maintenance? (Silt fence, inlet protection etc.)**
	x		**Are any EnS BMP's not installed properly or not functioning as designed? If "YES" identify required corrective action below.**
x			**Were all practices inspected in accordance with the NYS Standards and Specifications for Erosion and Sediment Control?**

Additional Comments: _____

Inspection of Post-Construction Stormwater Management Practices

YES	NO	N/A	
	X		**Has Construction begun on any Post-Construction Practices? If "YES" provide status of construction below. (Collector line trenches, level spreaders, swales etc.)**
	X		**Has construction been completed on any Post-Construction Practices? If so, identify any deficiencies below.**
	X		**Do any completed Post-Construction Practices require maintenance or repair? If so, identify required action below.**

Additional Comments: _____

_____

Stabilization

YES	NO	N/A	
X			**Are all existing disturbed areas contained by erosion control and sediment practices?**
	X		**Are there areas that require stabilization within the next 14 days? (7 if more than 5 acres have been disturbed)**
X			**Have stabilization measures been initiated in inactive areas?**
	X		**Is there current snow cover or frozen ground conditions?**
	X		**Rills or gullies?**
	X		**Slumping / deposition?**
	X		**Loss of vegetation?**
	X		**Lack of germination?**
	X		**Loss of mulching?**

Additional Comments: _____

_____

Receiving Structures / Water Bodies (Indicate locations where runoff leaves the project site on the plan)

YES	NO	N/A	
	X		**Surface water, swale or stream?**
	X		**Municipal or community system?**
Inspect locations where runoff from project site enters the receiving waters and indicate if there is evidence of :			
	X		**Rills or gullies?**
	X		**Slumping / deposition?**
	X		**Loss of vegetation?**
	X		**Undermining of structures?**
	X		**Was there a discharge into the receiving water on the day of inspection?**
	X		**Is there evidence of turbidity, sedimentation, or oil in the receiving waters?**

Additional Comments: _____

_____

_____

General Site Conditions

YES	NO	N/A	
		X	Have action items from previous reports been addressed?
		X	Does routine maintenance of protection components occur on a regular basis?
		X	Does cleaning and/or sweeping of affected roadways occur, at minimum, daily?
		X	Is debris and litter removed on a monthly basis, or a necessary?
		X	Is the site maintained in an orderly manner?
		X	Are materials that are potential stormwater contaminants stored in an appropriate manor and away from the concentrated flow of stormwater?

Additional Comments: _____

Visual Observations

YES	NO	N/A	
X			All erosion and sediment control measures have been installed /constructed?
X			All erosion and sediment control measures are being properly maintained?

Additional Comments: _____

Outstanding Item:

Item	Photo	Action

Contractor progress over last 7 days (2-3 if more than 5 acres have been disturbed): _____

NA

Anticipated work to begin over the next 7 days (2-3 if more than 5 acres have been disturbed): _____

NA

Any Additional Comments: _____

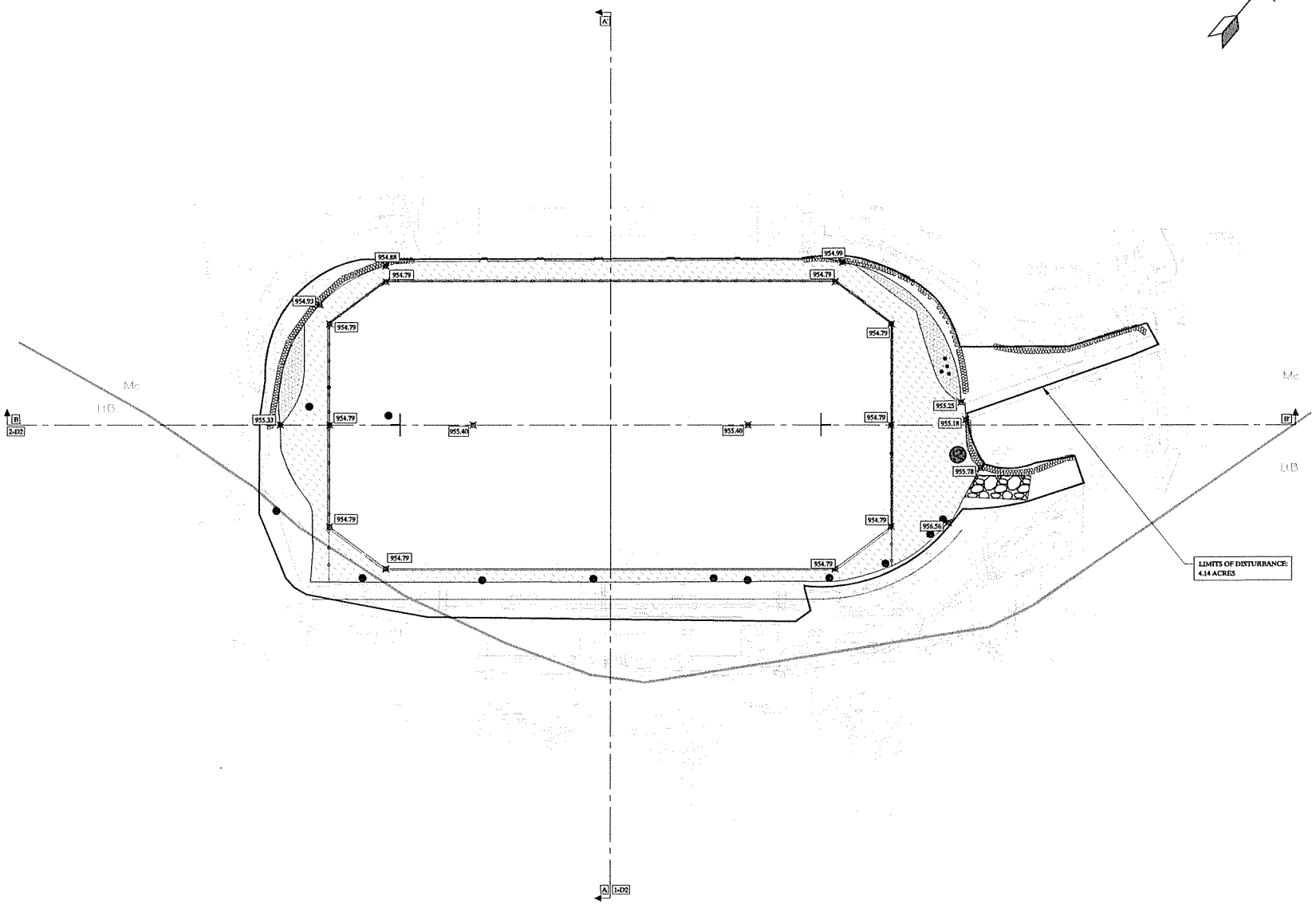

CLARK
COMPANIES

41155 STATE HIGHWAY 10, P.O. BOX 427, DELHI, NY. 13753
PHONE: (607)746-2727 FAX:(607)746-3107

CATELLA ENGINEERING, LLC
P.O. BOX 464
DELHI, N.Y.
13753-1282

LEGEND

STANDARD SILT FENCE

CONSTRUCTION ENTRANCE

CONCRETE WASHOUT

INLET PROTECTION

SOIL MAPPING

SOIL BOUNDARY

Mc MADE LAND: HSG B

LtB LORDSTOWN, TULLER AND OVID SOILS: HSG D

0 20 40 80 120
SCALE: 1" = 40'

NO	DATE	DESCRIPTION
1	3/20/23	REDEVELOPMENT RESUBMITAL

REVISIONS

ITHACA COLLEGE
953 DANBY ROAD
ITHACA NY, 14850

BUTTERFIELD STADIUM

THIS DRAWING IS THE CONFIDENTIAL PROPERTY OF CLARK COMPANIES AND IS TO BE USED ONLY BY AUTHORIZED PERSONNEL AND IN THE INTEREST OF CLARK COMPANIES,IT MUST BE ACCOUNTED FOR; SHALL NOT BE REPRODUCED IN WHOLE OR IN PART WITHOUT PRIOR WRITTEN PERMISSION FROM CLARK COMPANIES; AND MUST BE RETURNED TO CLARK COMPANIES OR STATED AT ANY TIME UPON REQUEST, BUT IN ANY EVENT AT COMPLETION OF THE WORK OR JOB; THE RECIPIENT AGREES TO KEEP CONFIDENTIAL AND TO REQUIRE HIS (ITS) EMPLOYEES TO KEEP CONFIDENTIAL THE INFORMATION CONTAINED HEREON. DISCLOSURE OF THE INFORMATION CONTAINED HEREON SHALL BE MADE ONLY TO THOSE PERSONS WHO REQUIRE SUCH INFORMATION FOR THEIR WORK ON CLARK COMPANIES PROJECTS.
CLARK COMPANIES DELHI, N.Y.

DESCRIPTION

EROSION AND SEDIMENT CONTROL LAYOUT

DATE	DWN. BY	CKD. BY	APP. BY	NUMBER
1/23/23	MG	RC	JC	S - 1
SCALE		TYPE	SIZE	
1" = 40'		D	24x36	

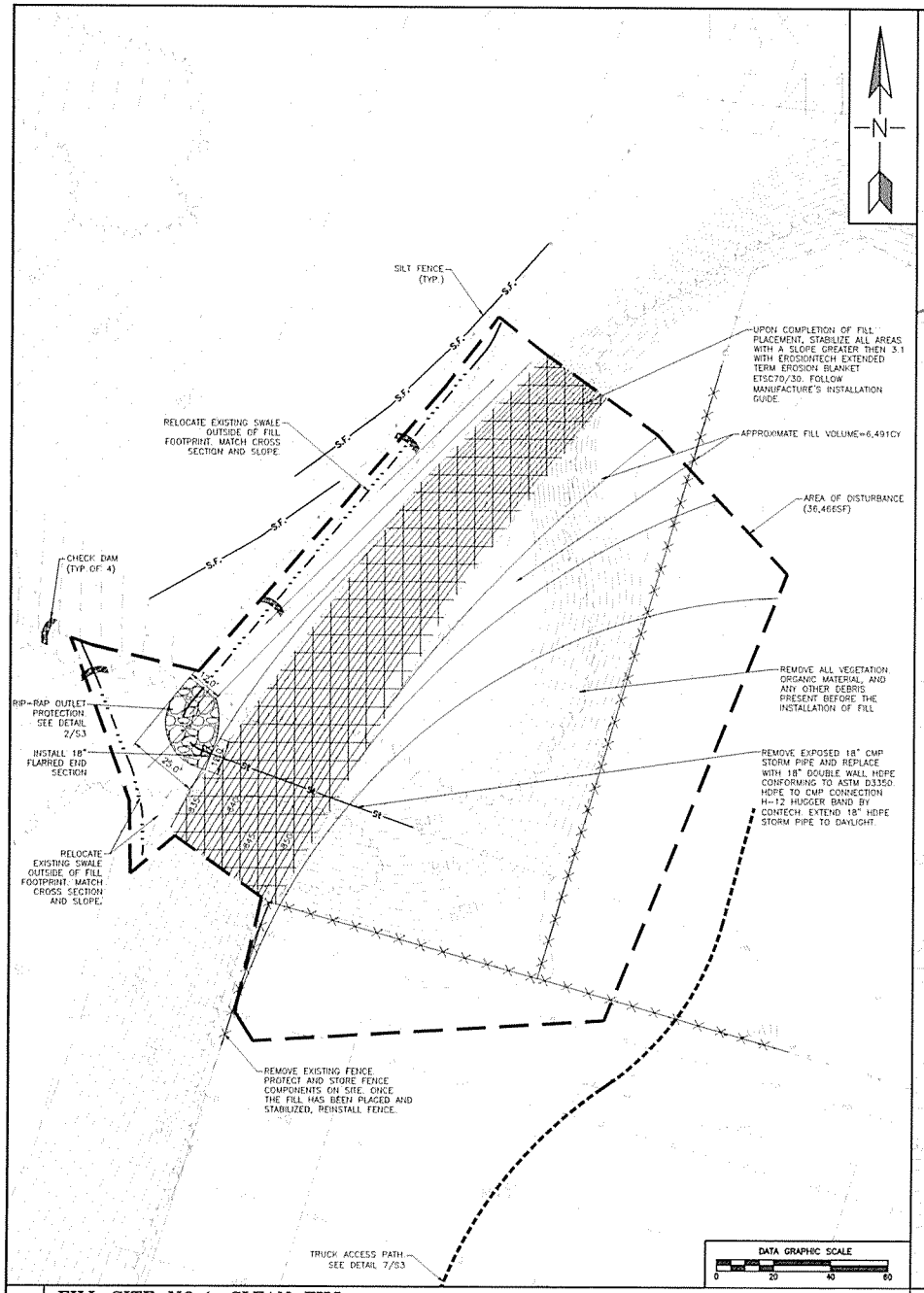

1 FILL SITE NO.1-CLEAN FILL

1"=20'

GENERAL NOTES

1. FILL BEING PLACED AT SITE NO.2 (TOPSOIL) IS NOT REQUIRED TO BE COMPACTED.

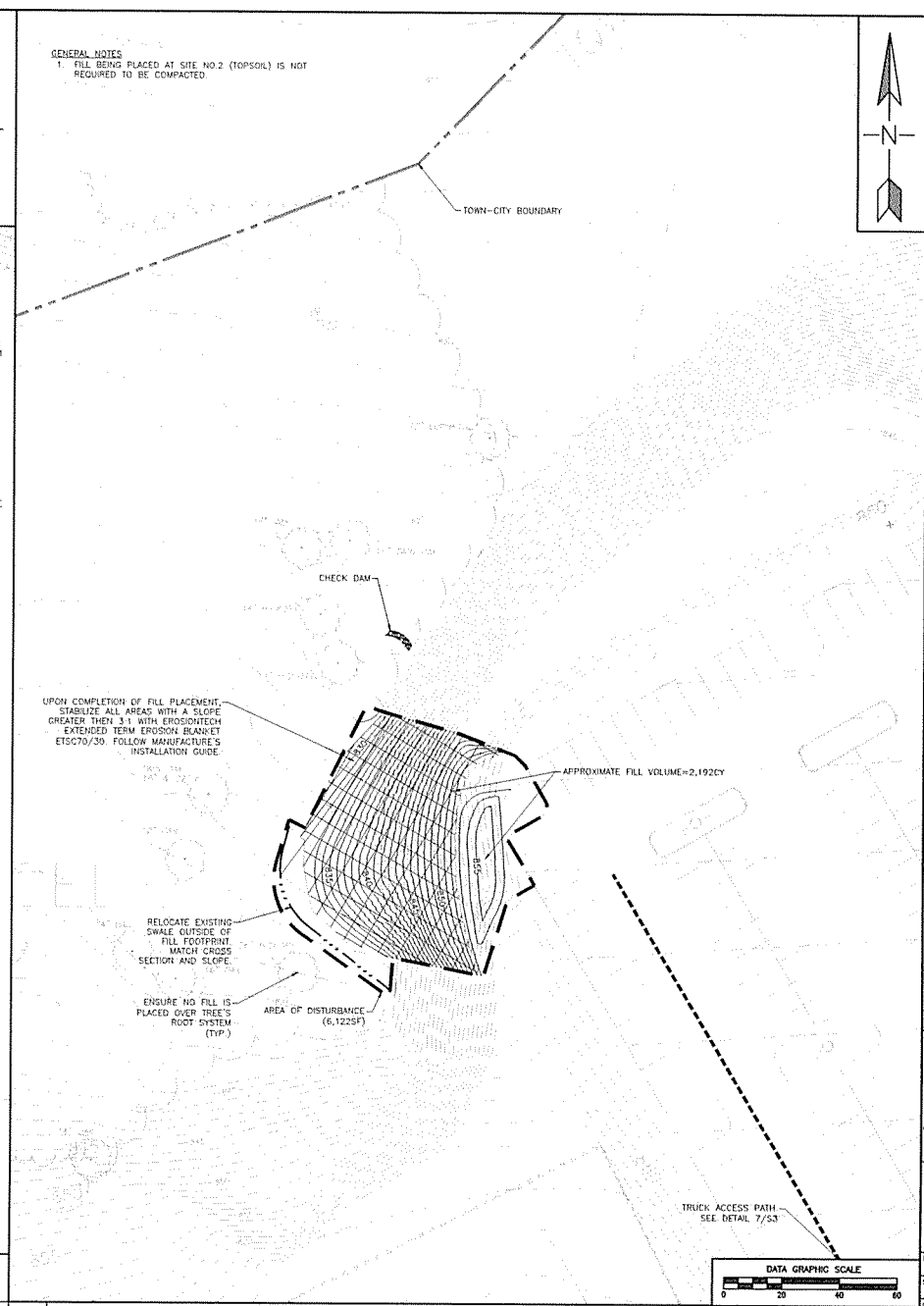

2 FILL SITE NO.2-TOPSOIL

1"=20'

T.G. MILLER, P.C.
ENGINEERS AND SURVEYORS
605 WEST STATE STREET, SUITE A
ITHACA, NEW YORK 14850
WWW.TGMILLERPC.COM
607-272-6477

ITHACA COLLEGE BUTTERFIELD SPOILS

TOWN OF ITHACA, TOMPKINS COUNTY, NEW YORK

DATE	REVISION	BY

SEAL

SHEET TITLE

FILL SITES E&SC AND GRADING PLANS

DATE: 03/20/20	JOB No. E20-17
SCALE: AS SHOWN	
DRAWN BY: OBB	SHEET S2
CHECKED: AJS	

WARNING: ALTERATIONS TO THIS MAP NOT CONFORMING TO SECTION 7209, SUBDIVISION 2 NEW YORK STATE EDUCATION LAW, ARE PROHIBITED BY LAW. ALL CERTIFICATIONS HEREON ARE VALID FOR THIS MAP AND COPIES THEREOF ONLY IF SAID MAP OR COPIES BEAR THE SEAL OF THE LICENSED PROFESSIONAL ENGINEER WHOSE SIGNATURE APPEARS HEREON.

Fill site: